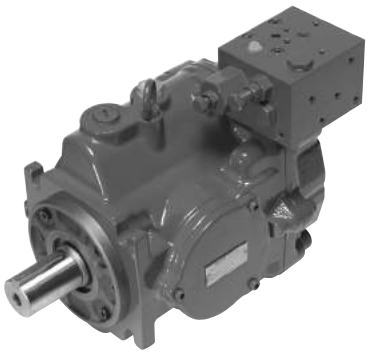

2.2 MEDIUM HEAVY DUTY SERIES

CONTENTS PVV100

Ordering Code

2.2.1 Medium Heavy Duty Series

Technical Information

2.2.2 Specifications
2.2.3 Hydraulic fluids
2.2.4 Viscosity range
2.2.5 Temperature range
2.2.6 Specifications for special fluids
2.2.7 Seals
2.2.8 Filtration
2.2.9 Adjustments
2.2.10 Installation notes

Control Options

2.2.11 Standard pressure control
2.2.12 Remote pressure control
2.2.13 Power (torque) control
2.2.14 Load sensing control
2.2.15 Availability of control type

Performance Data

2.2.16 PPV100-16
2.2.17 PPV100-37
2.2.18 PPV100-56
2.2.19 PPV100-71
2.2.20 PPV100-100
2.2.21 PPV100-145
2.2.22 PPV100-180

Dimensions

2.2.23 PPV100-16
2.2.24 PPV100-37
2.2.25 PPV100-56
2.2.26 PPV100-71
2.2.27 PPV100-100
2.2.28 PPV100-145
2.2.29 PPV100-180

ORDERING CODE

2.2.1 Medium Heavy Duty Series

PPV100 – 16 – F R 01 K – _ _ _ – K – 10 80 – XXXX

Axial piston pump
Medium Heavy Duty Series

Size

16	16.3	cm³/rev (not with control type 09)
37	37.1	cm³/rev
56	56.3	cm³/rev
71	70.7	cm³/rev
100	100.5	cm³/rev
145	145.2	cm³/rev
180	180.7	cm³/rev

Mounting type

F Flange mounting

Shaft rotation

R Clockwise
(viewed from shaft end)

Control type

01 Pressure compensator
07 Remote pressure compensator (sizes 16/37/56 only)
09 Power (torque) compensator
14 Load sensing control

Setting range (for control type 01 only)

K 50 - 350 bar (standard)

Power setting (for control type 09 only)

5.5	5.5	kW
7.5	7.5	kW
11	11	kW
15	15	kW
18.5	18.5	kW
22	22	kW
30	30	kW
37	37	kW
45	45	kW
55	55	kW
75	75	kW
90	90	kW
110	110	kW

Power supply frequency (for control type 09 only)

A 50 Hz
B 60 Hz

Electric motor, number of poles (for control type 09 only)

4 4 poles
6 6 poles

Shaft extension

K Parallel keyed shaft

Design number

10 Design number

Design standard

80 European Design Standard
950 North American Standard (size 16 / 37 / 56 / 71 only)
954 North American Standard (size 100 / 145 / 180 only)

Modification number

XXXX Determined by manufacturer

2.2.2 Specifications

Pump size			16	37	56	71	100	145	180
Geometric displacement		[cm³/rev]	16.3	37.1	56.3	70.7	100.5	145.2	180.7
Pressure	Rated	[bar]	315						
	Peak		350						
Drive speed	Min.	[rpm]	600						
	Max.		3600	2700	2500	2300	2100	1800	1800
Power (1500 rpm, 280 bar)		[kW]	13	29	43	54	77	112	139
Drive torque (280 bar)		[Nm]	73	165	251	315	448	647	805
Pre-fill oil volume		[cm³]	400	700	900	1300	1700	2400	3200
Approx. weight (with pressure compensator)		[kg]	14.5	19.5	25.7	35.0	44.6	60.0	70.4
Approx. weight (with power control)			–	23.0	29.0	38.0	48.0	63.0	74.2
Approx. weight (with load sensing control)			17.5	22.5	28.7	38.0	47.6	63.0	73.4

2.2.3 Hydraulic fluids

The pump series is designed for use with

HL Hydraulic oil (normal mineral oil) and
HLP Hydraulic oils of the R&O type (Rust and Oxidation inhibitor)
HFD-U Polyolester

For use with other fluids, please contact HYDAC DRIVE CENTER.

2.2.4 Viscosity range

Minimum viscosity:
10 cSt (mm²/s)*
Short-term (t ≤ 1 min) for a max. temperature at drain port of 95 °C

Normal operating viscosity:
10 - 200 cSt (mm²/s)*

Maximum viscosity:
1000 cSt (mm²/s)*
Short-term (t ≤ 1 min) for cold starts (p ≤ 30 bar, n ≤ 1000 rpm, tmin - 10 °C)

*measured at drain port

For low temperature applications, please contact HYDAC DRIVE CENTER

2.2.5 Temperature range

-20 to +95 °C

Note:
The highest fluid temperature will be at the drain port of the pump, up to 20 °C higher than in the reservoir.

2.2.6 Specifications for special fluids

Fluid type	Pressure [bar]		Drive speed [rpm]		Temperature range [°C]	Viscosity range [cSt]	Design standard*2
	Rated	Intermittent	Rated	Maximum			
Water glycol Water > 35 % Polymer solution (HFC)	210	210	1200	1800*1	0 - 50	20 - 200	30
Phosphate ester synthetic (HFD-R)	210	210	1200	1800*1	0 - 60		80
Polyolester synthetic (HFD-U)	280	320	1200	1800	0 - 60		80

*1 – If a drive speed of 1500 rpm or greater is used, an overhead reservoir is required.
*2 – Use "Design Standard" field in Ordering Code 2.2.1.

2.2.7 Seals

The pump series is equipped with fluorocarbon (FPM) seals as standard.

If special hydraulic fluids are used, the seal material must be changed if required.

2.2.8 Filtration

For maximum service life of the pump and system components, the system should be protected from contamination by effective filtration.

Cleanliness class to NAS 1638 Class 10 (21/19/16 ISO 4406:1999) or cleaner.

2.2.9 Adjustments

The pumps are supplied with a minimum discharge pressure and maximum flow rate setting. Pressure and flow rate can be adjusted using the adjustment screws to meet your system requirements.

Pump size	Volume		Pressure
	Volume adjustment screw rate	Min. adjustable displacement	Pressure adjustment screw rate
	[cm³ per turn]	[cm³/rev]	[bar per turn]
PPV100-16	1.4	8	55
PPV100-37	3.3	16	
PPV100-56	4.2	35	
PPV100-71	4.9	45	63
PPV100-100	6.2	63	
PPV100-145	9.4	95	
PPV100-180	10.3	125	57

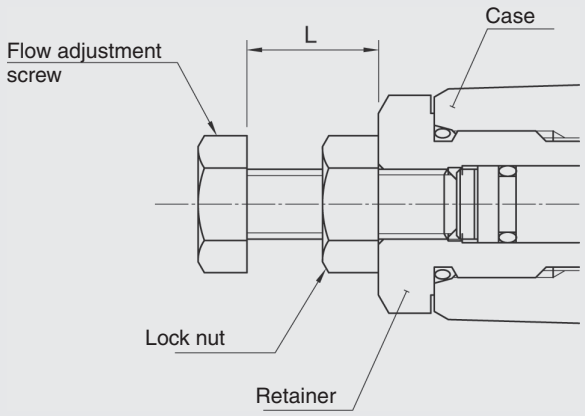

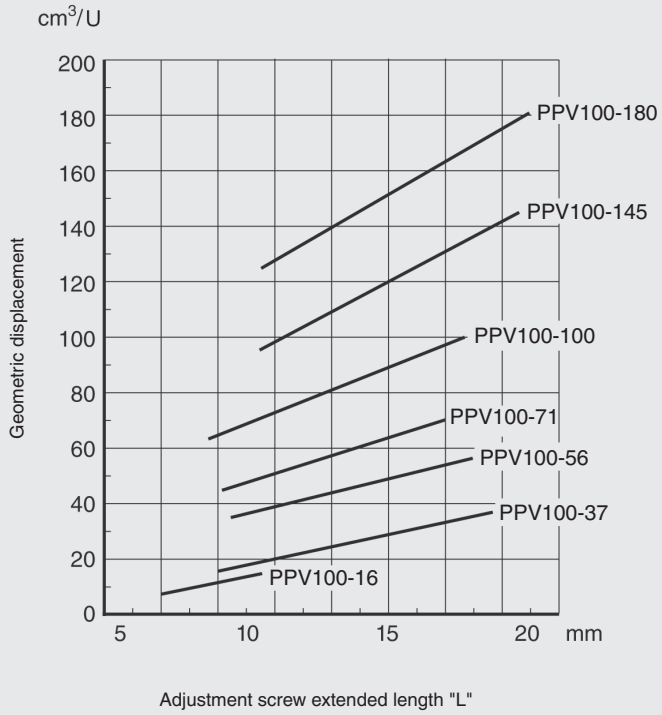

2.2.10 Installation notes

The pump should be installed horizontally with the case drain line initially rising above the level of the pump before continuing to the tank as shown in the diagram below. Do not connect the drain line to the suction line. The top drain port should always be used and the internal diameter of the drain line should be equal to or larger than the drain port to minimise pressure in the pump case. The pressure in the pump case should not exceed 1 bar as shown in the diagram below. Peak pressure should never exceed 4 bar.

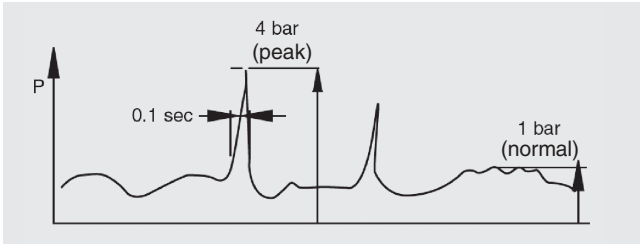

Installing the pump above the tank

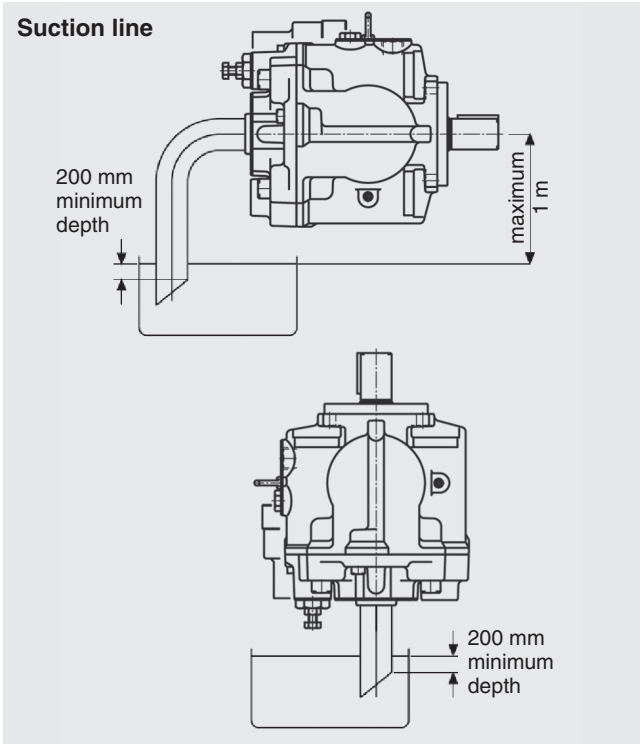

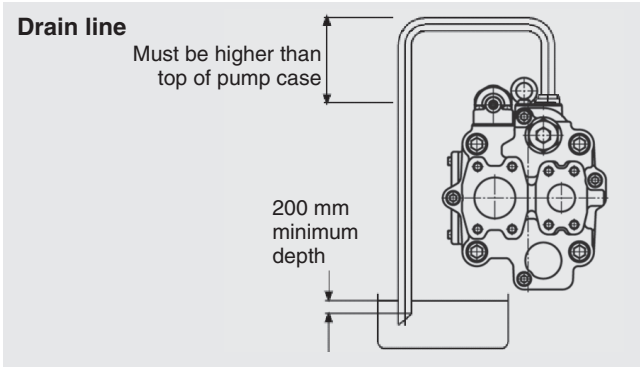

Precautions:

- The distance between suction and drain pipes must be 200 mm minimum.
- Suction and drain pipes must be immersed at least 200 mm below the lowest oil level under operating conditions.
- The distance between the oil surface and the centre of the shaft must not exceed 1 m.
- The oil in the pump case must be refilled if the pump has not been operated for one month or longer.

Installing the pump vertically

For applications requiring vertical installation (shaft at the top) please connect lines as shown in the diagram below.

The oil level in the tank should be higher than the pump mounting flange (see diagram ❶). If the oil level in the tank is lower than the pump mounting flange, the drain line should be installed as shown in diagram ❷.

Once the pump is installed in the tank and immersed in the oil, the drain ports must be open to provide adequate lubrication to the internal components.

If the pump is installed outside the tank, there must be a separate drain line to the tank (diagram ❸). If the drain line is higher than the oil level, fill the line with oil before commissioning.

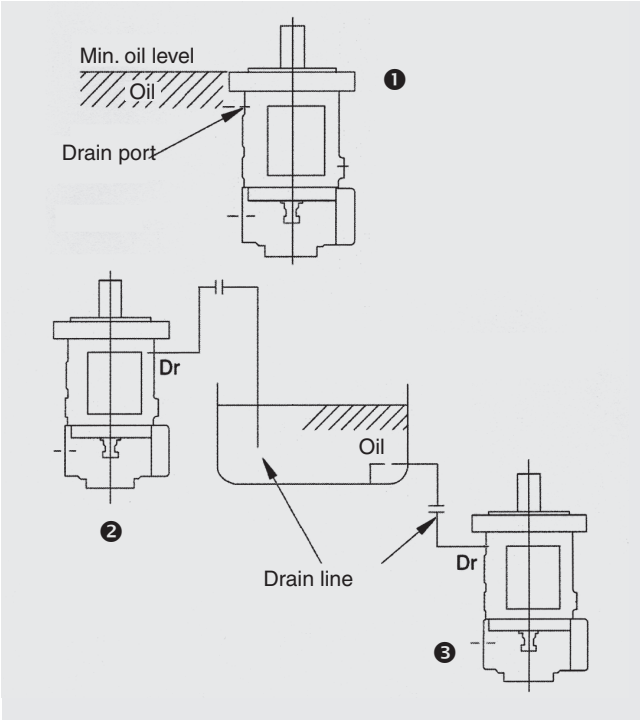

CONTROL OPTIONS

2.2.11 Standard pressure control

Description	Performance characteristics	Hydraulic circuit
● When the system pressure increases and comes close to the preset cut-off pressure, the pump flow decreases automatically and the set pressure is maintained.	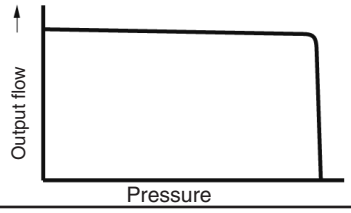	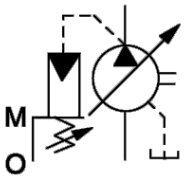

2.2.12 Remote pressure control

Description	Performance characteristics	Hydraulic circuit
● The pump is used in combination with the pilot relief valve or multistage pressure control valve. By controlling the pilot pressure, the full cut-off pressure can be remote-controlled according to your requirements.	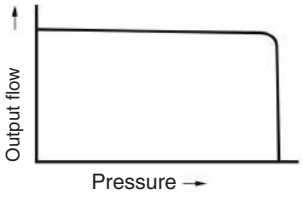	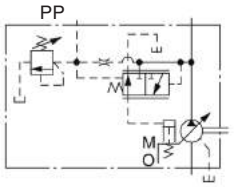

Recommended valve for use with remote pressure control

Type:	Part no.:
DB3E-02X-350V	397405

2.2.13 Power (torque) compensator

Description	Performance characteristics	Hydraulic circuit
● This type of control can control the pump drive power according to the motor output. ● When the system pressure increases, the swash plate tilt angle (output flow) decreases, in line with the pre-set power values. ● This type of control can enable one pump to act as two pumps (low-pressure and large-flow / high-pressure and small-flow). The motor capacity can therefore be reduced.	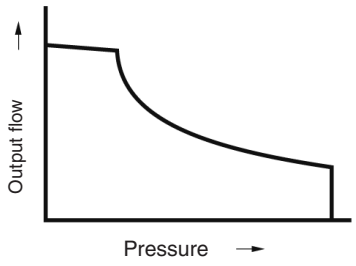	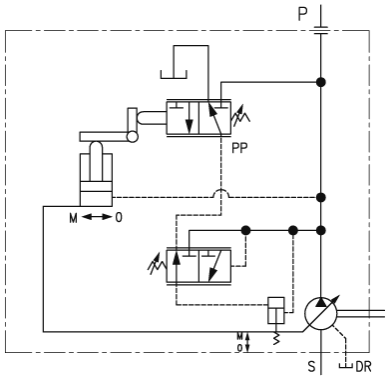

2.2.14 Load sensing compensator

Description	Performance characteristics	Hydraulic circuit
● This is an energy-saving type of control which maintains the pump flow and load pressure at the absolute minimum level necessary to operate the actuator. ● This type of control automatically regulates the displacement so that the differential pressure via the throttle valve remains constant. To do so, the load pressure must be introduced to the load sensing port "L" of the pump through an external line. ● Remote control of the pressure compensator is provided via the pilot port "PP". ● The standard differential pressure setting is **15 bar.** The differential pressure adjustment range is **10 to 30 bar.**	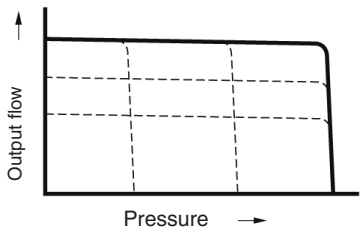	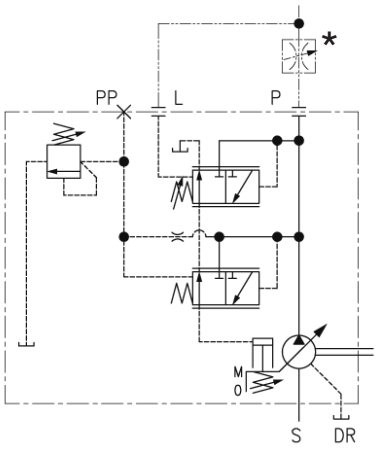

*A throttle valve is not included with the pump.

2.2.15 Availability of control type

Pump size	Geometric displacement cm3/rev	01 Pressure compensator	07 Remote pressure compensator	09 Power control	14 Load sensing compensator
PPV100-16	16.3	●	●		●
PPV100-37	37.1	●	●	●	●
PPV100-56	56.3	●	●	●	●
PPV100-71	70.7	●		●	●
PPV100-100	100.5	●		●	●
PPV100-145	145.2	●		●	●
PPV100-180	180.7	●		●	●

Pump size	Drive power kW																					
	Electric motor 4-pole												Electric motor 6-pole									
		11	15	18.5	22	30	37	45	55	75	90	110	5.5	7.5	11	15	18.5	22	30	37	45	55	75
PPV100-37	50 Hz	●	●	●									●	●	●								
	60 Hz	●	●	●	●									●	●	●							
PPV100-56	50 Hz		●	●	●	●								●	●	●	●						
	60 Hz			●	●	●	●								●	●	●	●					
PPV100-71	50 Hz			●	●	●	●								●	●	●	●					
	60 Hz				●	●	●	●								●	●	●	●				
PPV100-100	50 Hz				●	●	●	●	●							●	●	●	●				
	60 Hz					●	●	●	●								●	●	●	●	●		
PPV100-145	50 Hz					●	●	●	●	●							●	●	●	●	●	●	
	60 Hz						●	●	●	●	●							●	●	●	●	●	
PPV100-180	50 Hz						●	●	●	●	●							●	●	●	●	●	
	60 Hz							●	●	●	●	●							●	●	●	●	●

PERFORMANCE DATA

2.2.16 PPV100-16

● Performance characteristic curve

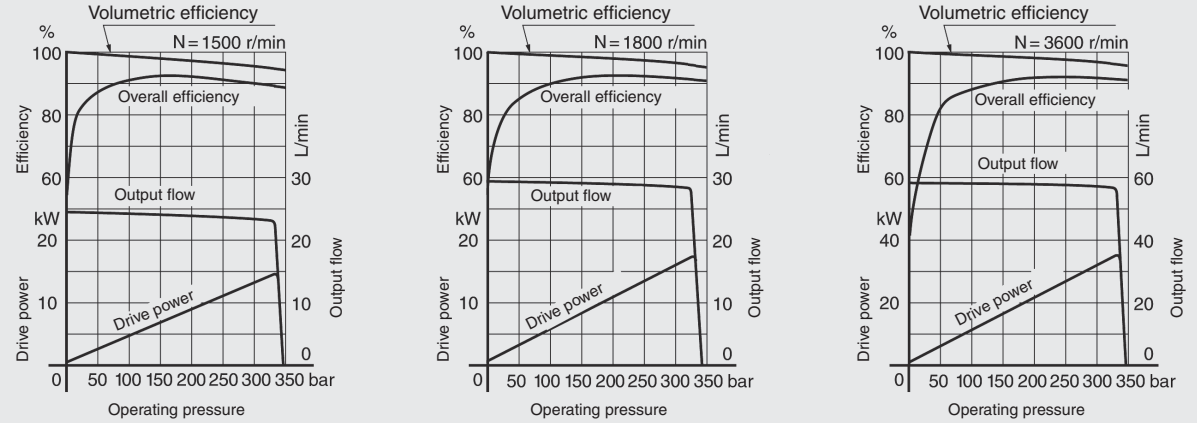

● Drive power

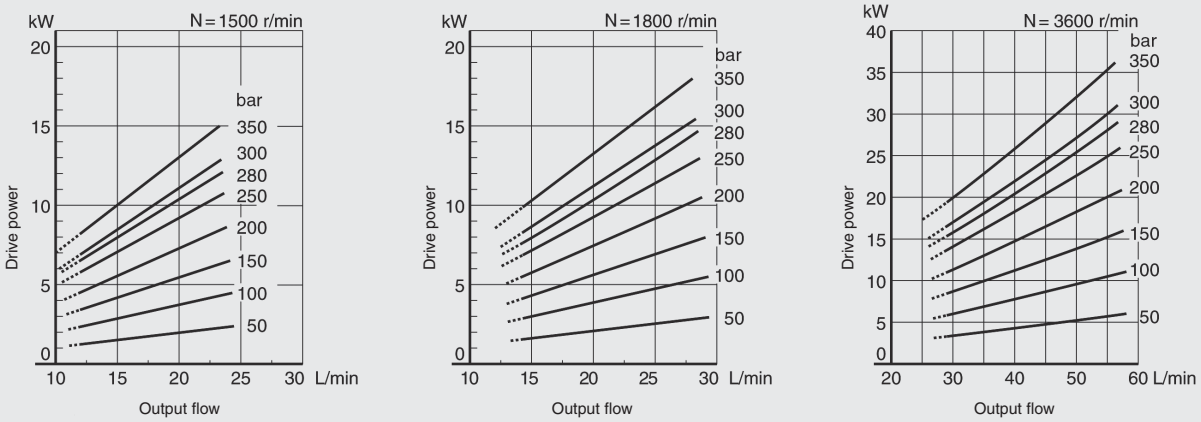

● Full cut-off power

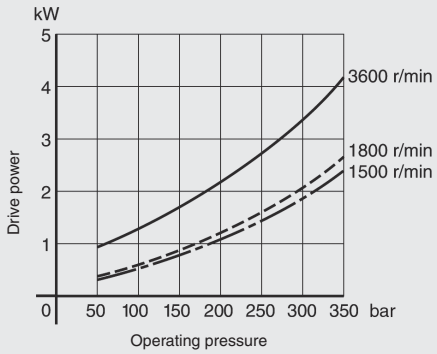

● Drain

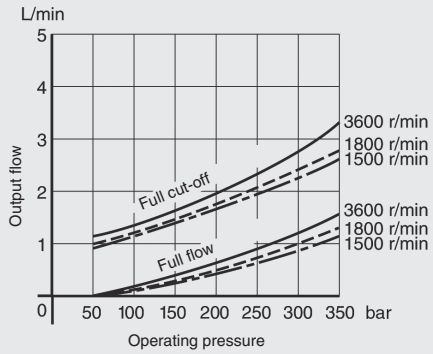

● Noise level (one metre horizontally away from pump head cover)

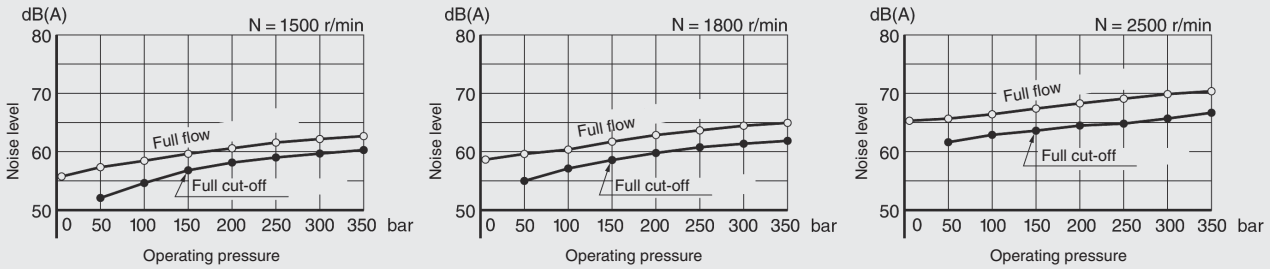

● Performance characteristic curve

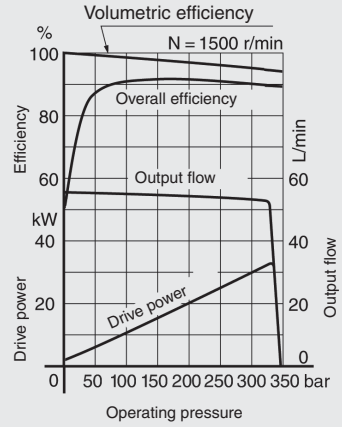

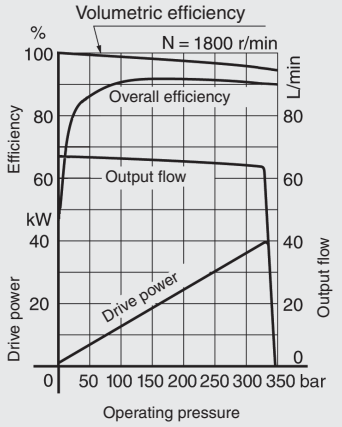

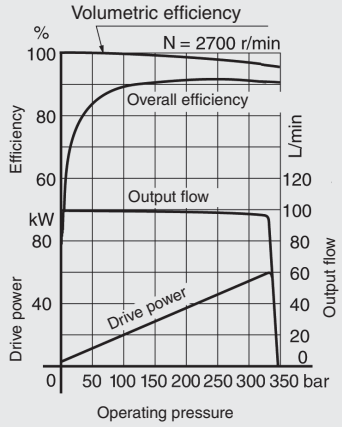

● Drive power

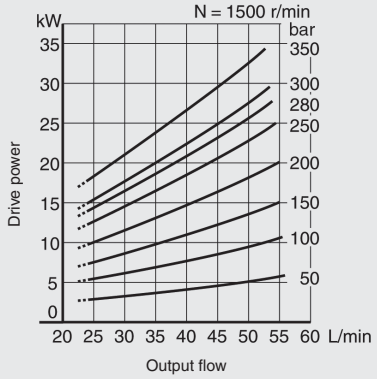

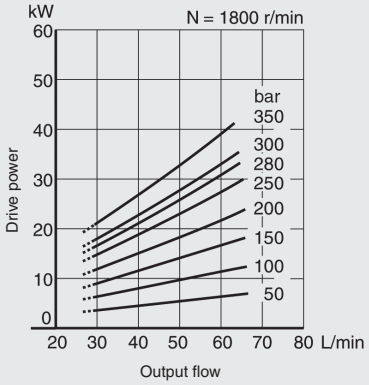

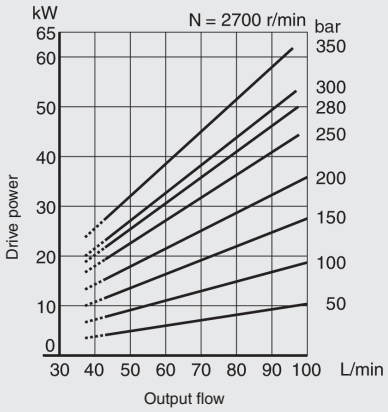

Note: The dotted lines in the graph are below the minimum adjustable flow

● Full cut-off power

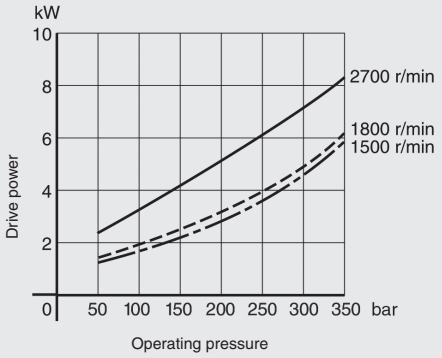

● Drain

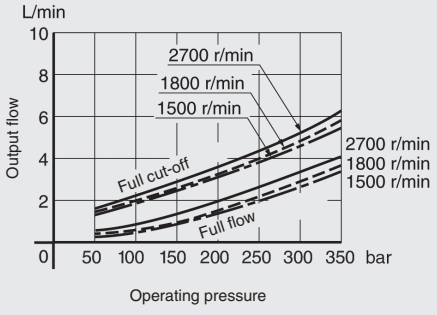

● Noise level (one metre horizontally away from pump head cover)

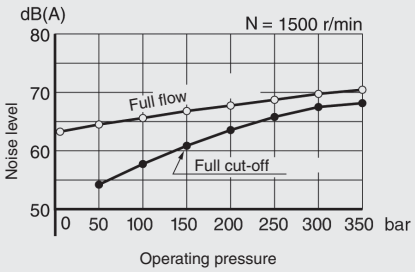

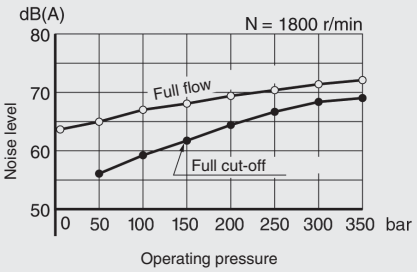

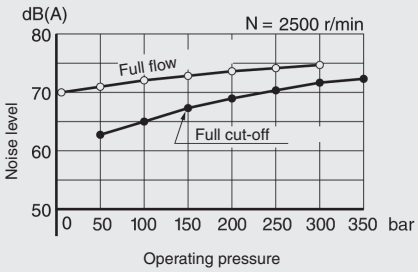

2.2.18 PPV100-56

● Performance characteristic curve

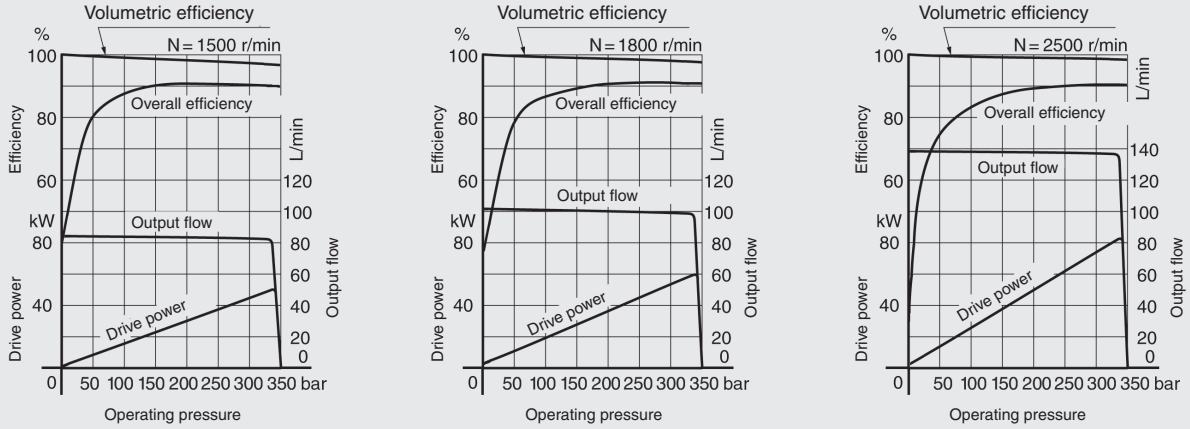

● Drive power

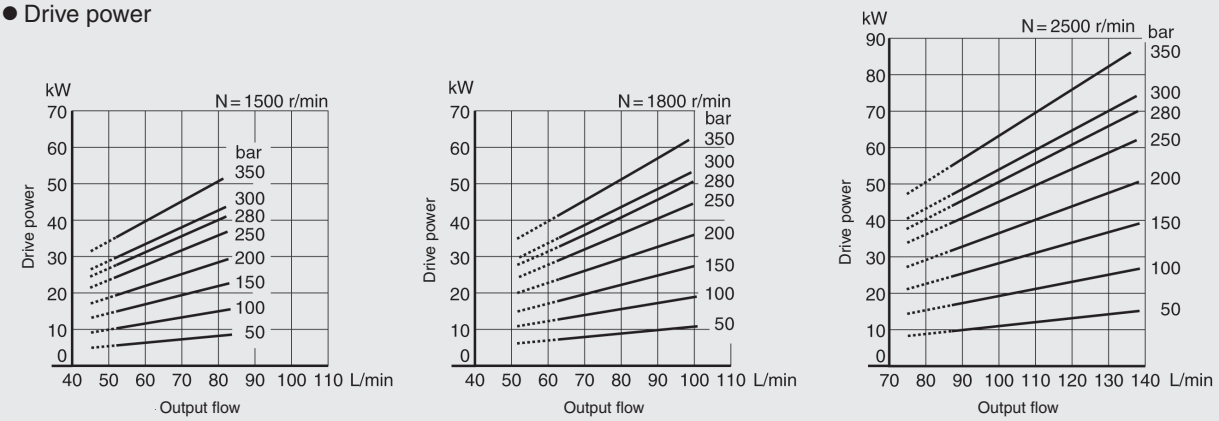

Note: The dotted lines in the graph are below the minimum adjustable flow

● Full cut-off power

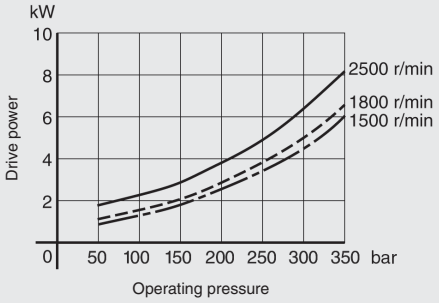

● Drain

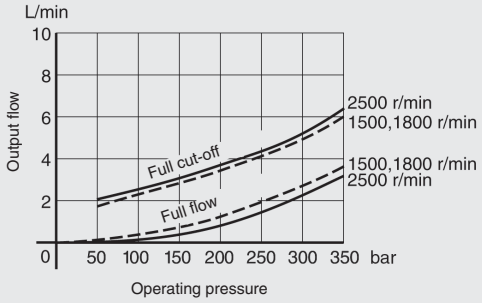

● Noise level (one metre horizontally away from pump head cover)

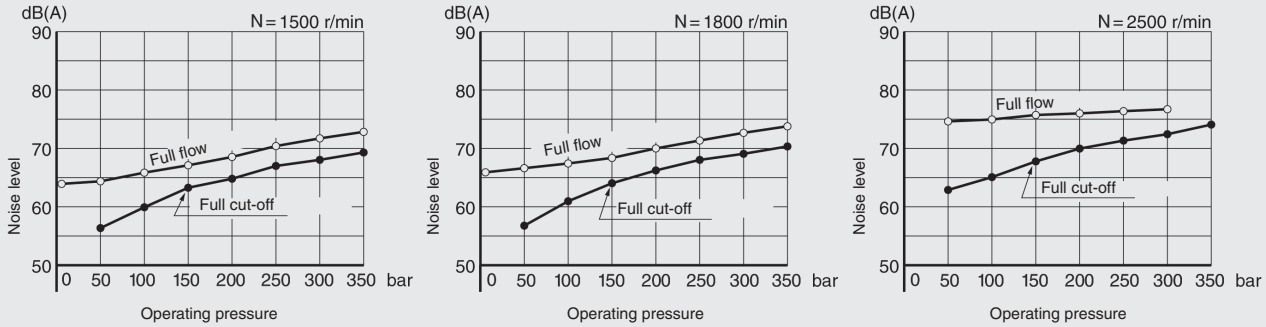

● Performance characteristic curve

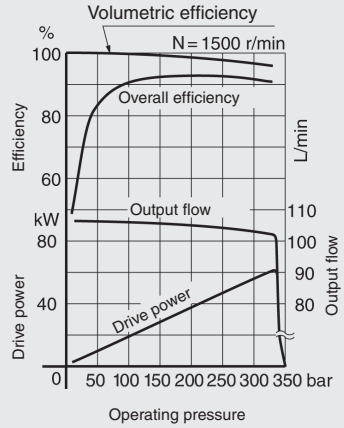

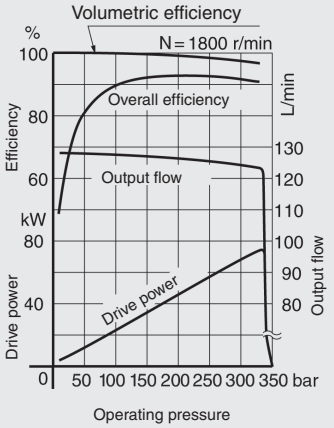

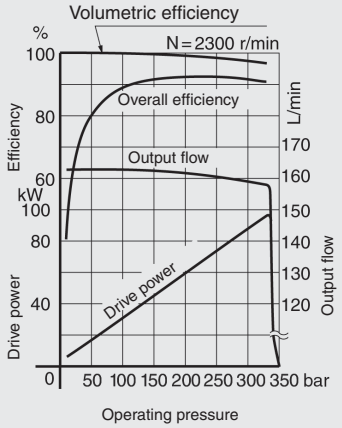

● Drive power

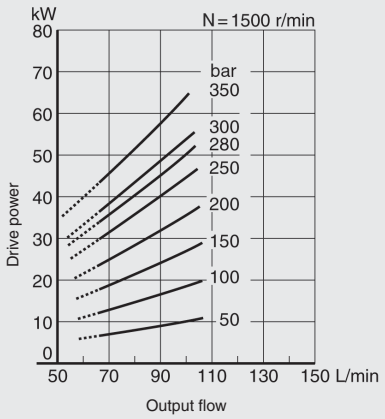

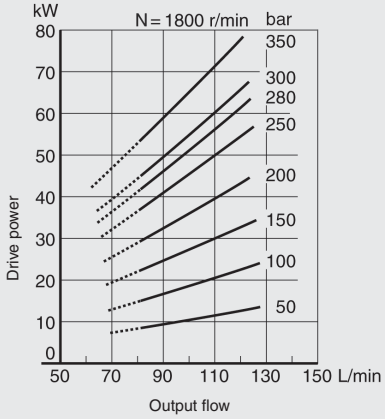

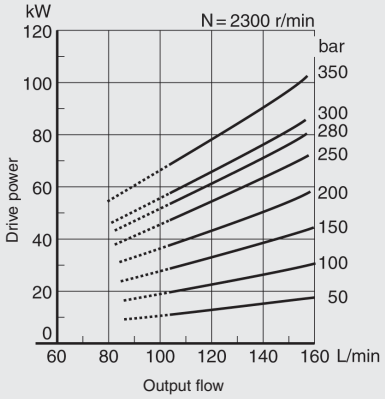

Note: The dotted lines in the graph are below the minimum adjustable flow

● Full cut-off power

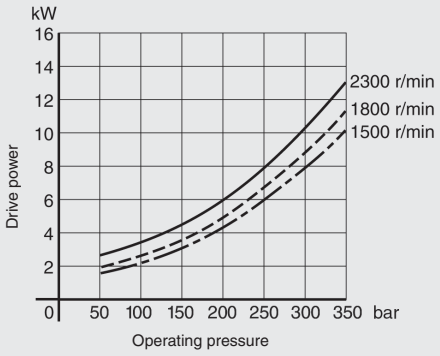

● Drain

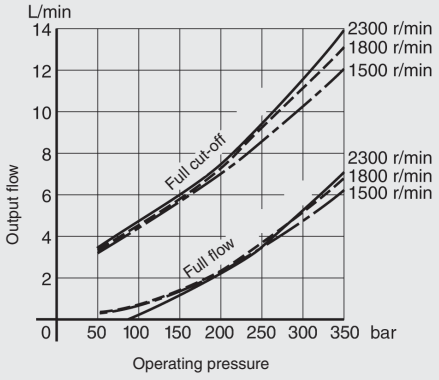

● Noise level (one metre horizontally away from pump head cover)

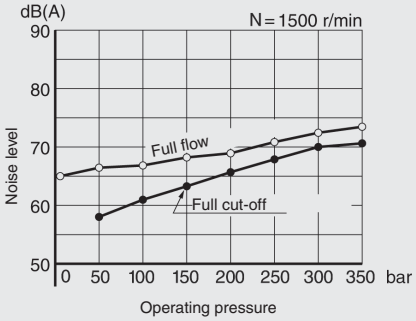

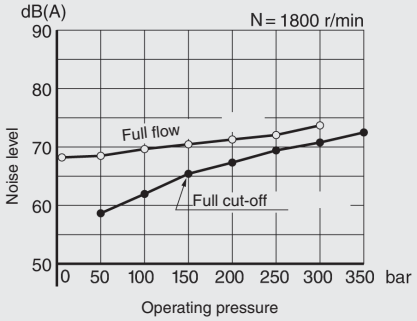

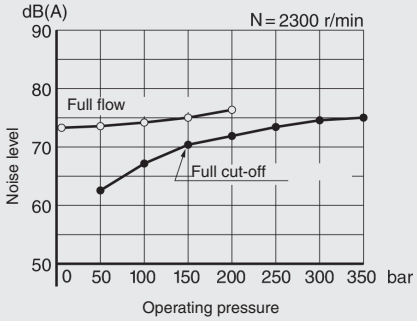

2.2.20 PPV100-100

● Performance characteristic curve

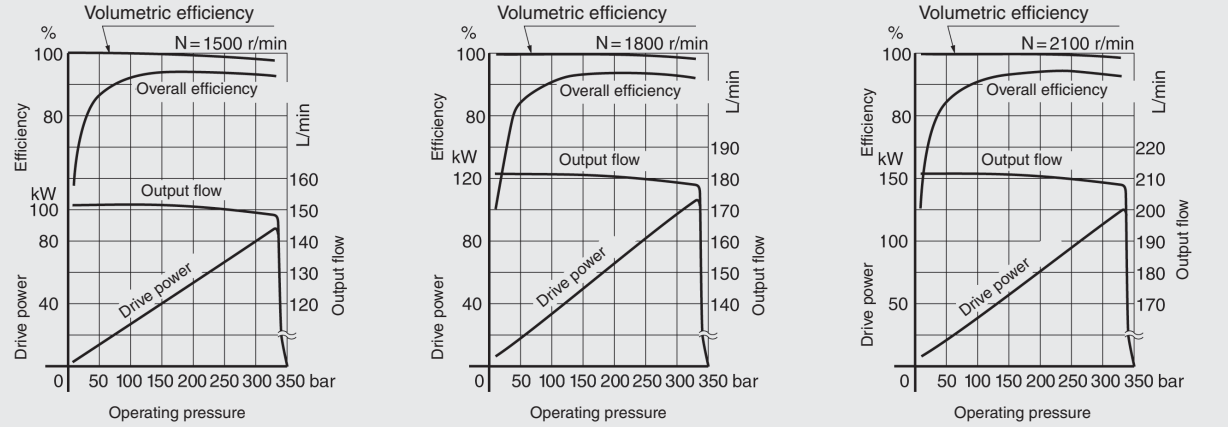

● Drive power

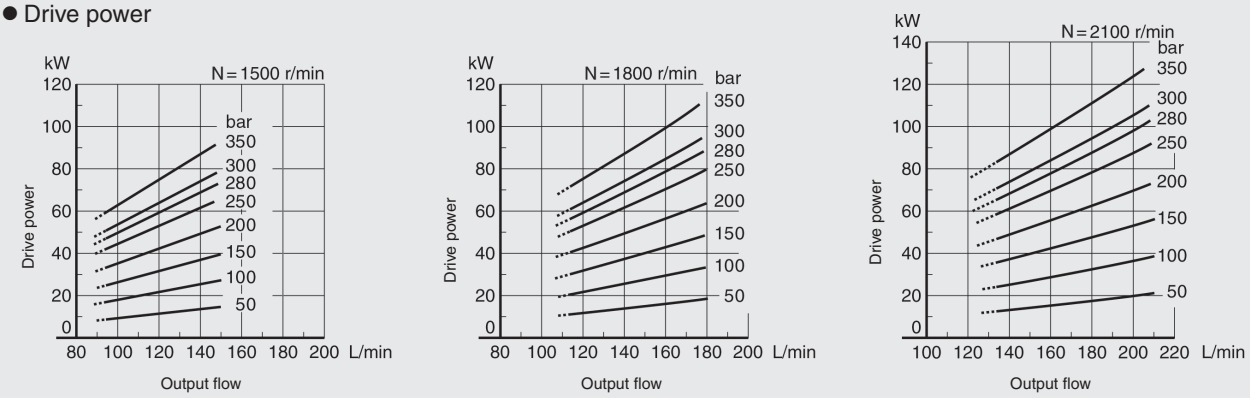

Note: The dotted lines in the graph are below the minimum adjustable flow

● Full cut-off power

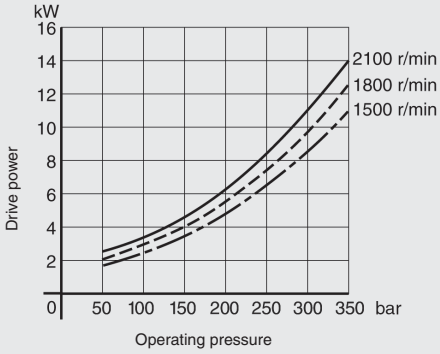

● Drain

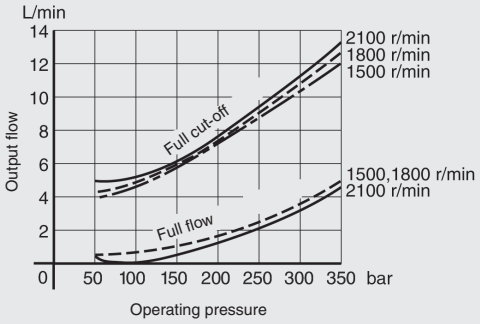

● Noise level (one metre horizontally away from pump head cover)

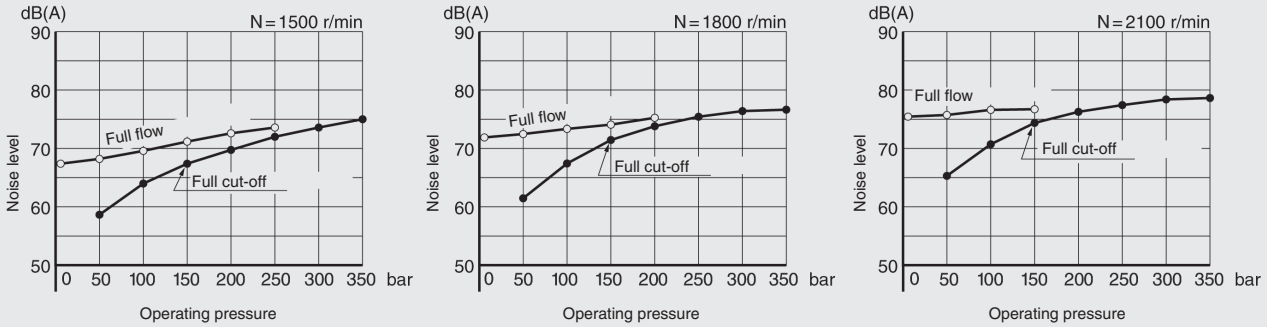

● Performance characteristic curve

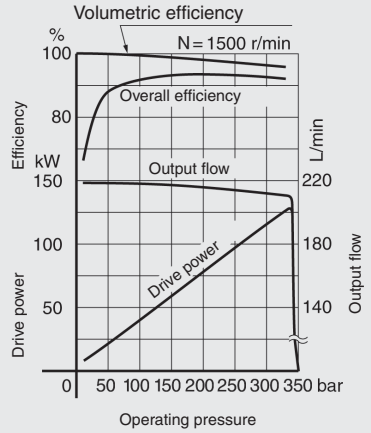

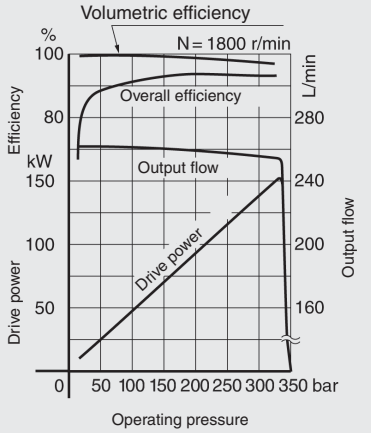

● Drive power

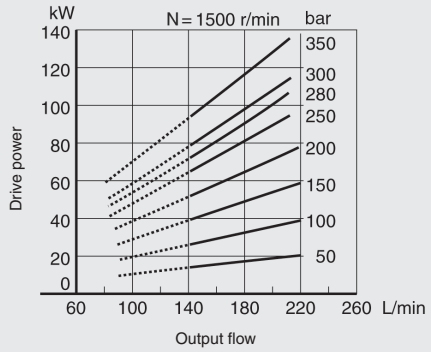

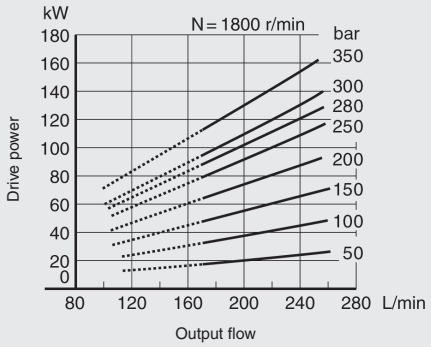

Note: The dotted lines in the graph are below the minimum adjustable flow

● Full cut-off power

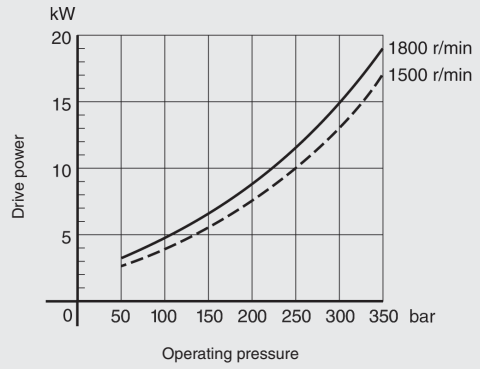

● Drain

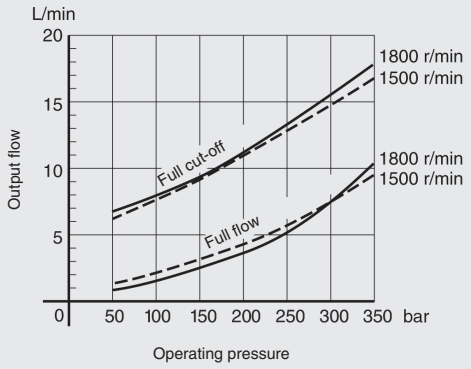

● Noise level (one metre horizontally away from pump head cover)

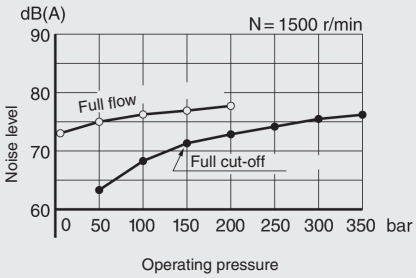

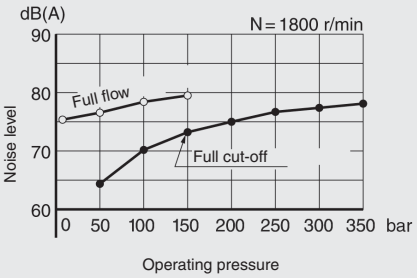

2.2.22 PPV100-180

● Performance characteristic curve

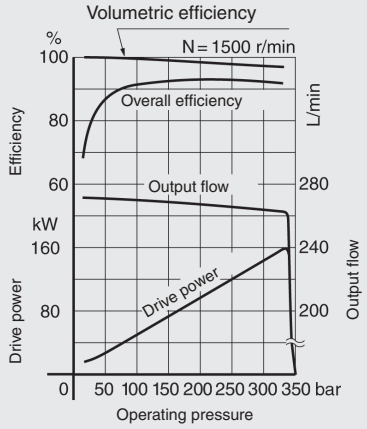

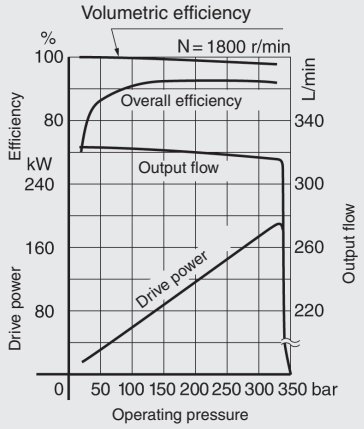

● Drive power

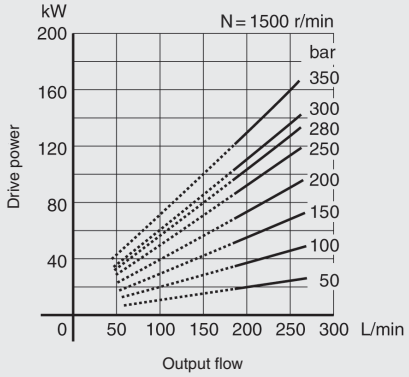

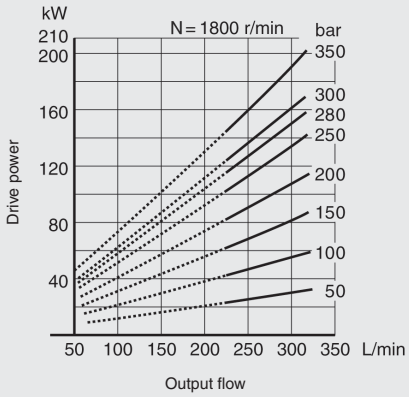

Note: The dotted lines in the graph are below the minimum adjustable flow

● Full cut-off power

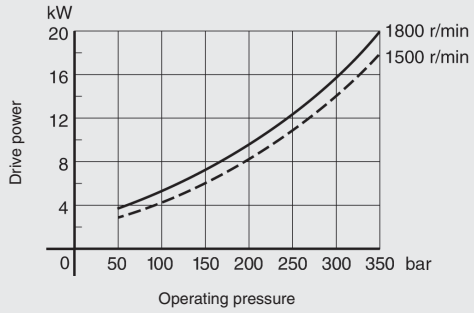

● Drain

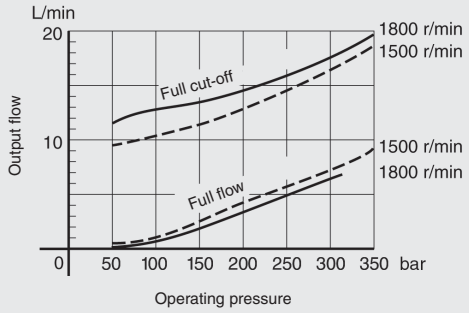

● Noise level (one metre horizontally away from pump head cover)

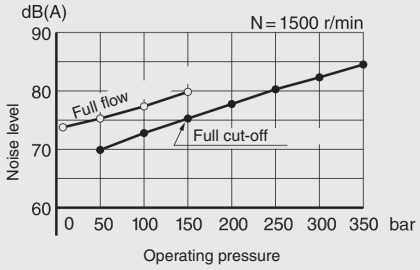

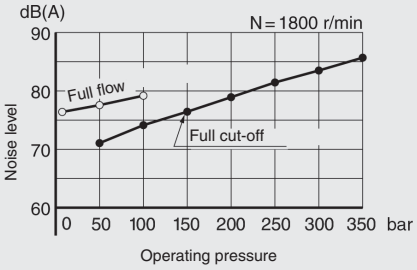

PPV100-16 with pressure control 01

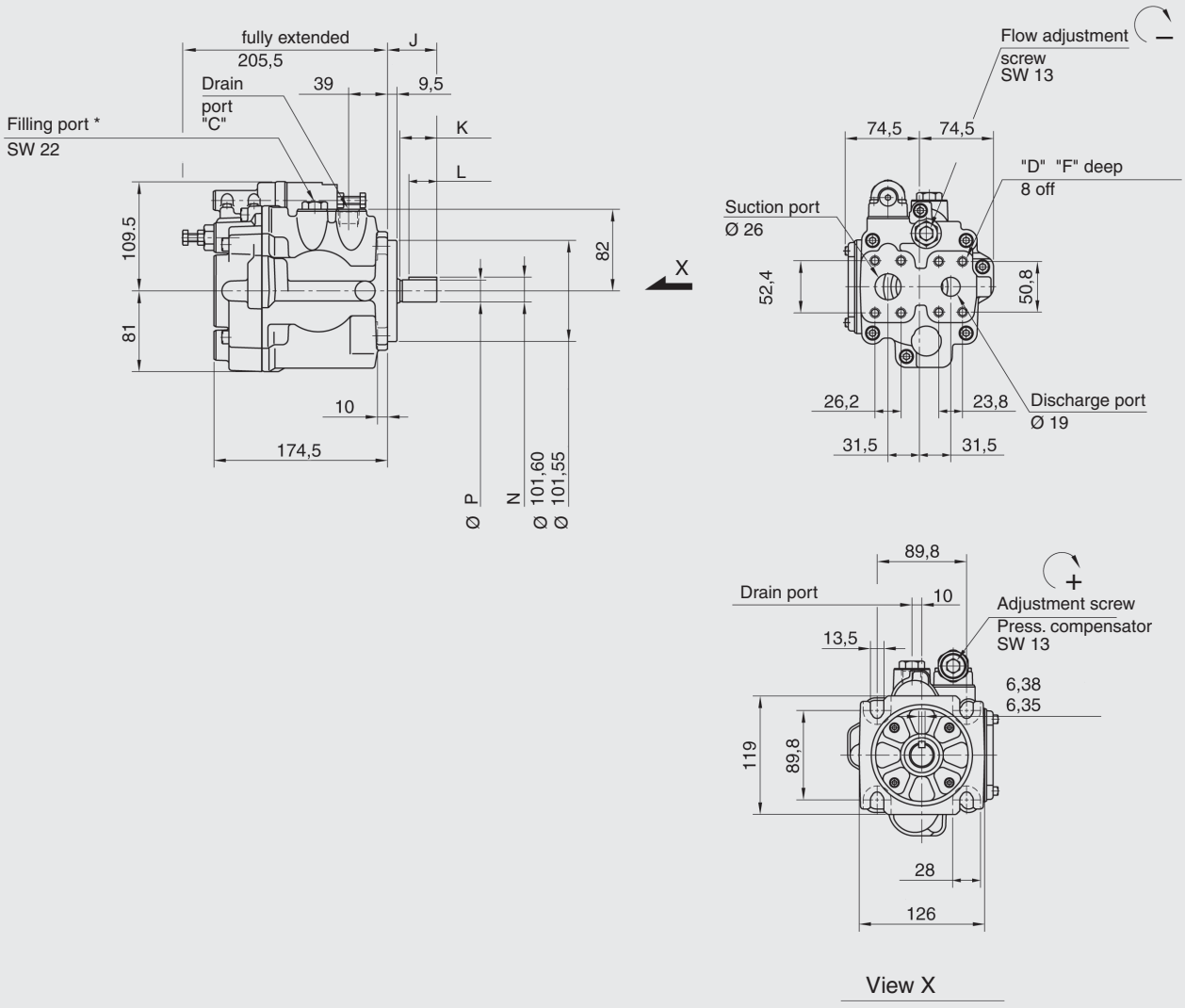

* Install the pump so that the filling port is at the top.

Model numbers	Thread size			Dimensions in mm						
	C	D	E	F	H	J	K	L	N	P
PPV100-16 ... 1080 European Standard	1/2 BSP.F	M10	–	19	–	49.5	37	28	25.01 24.85	22.23 22.20
PPV100-16 ... 10950 North American Standard	7/8-14 UNF	3/8-16 UNC	–	19	–	49.5	37	28	25.01 24.85	22.23 22.20

PPV100-16 with remote pressure control 07

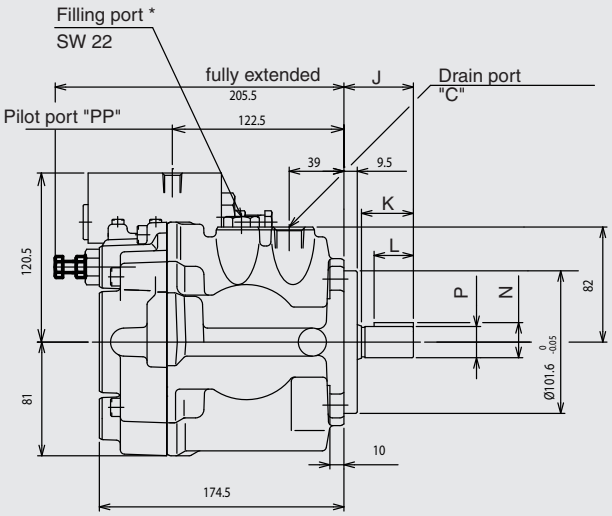

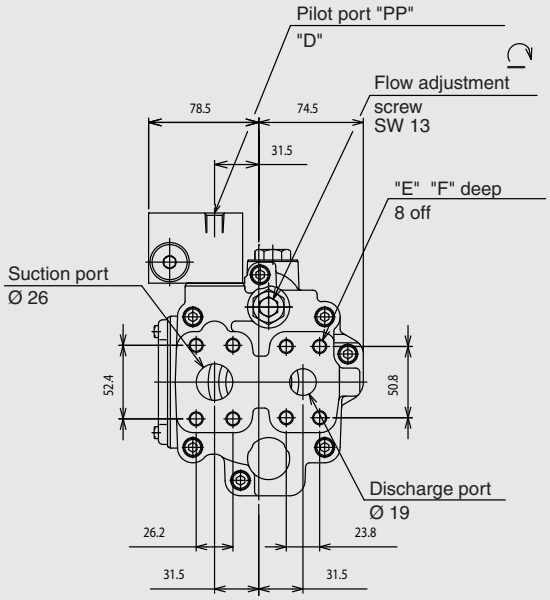

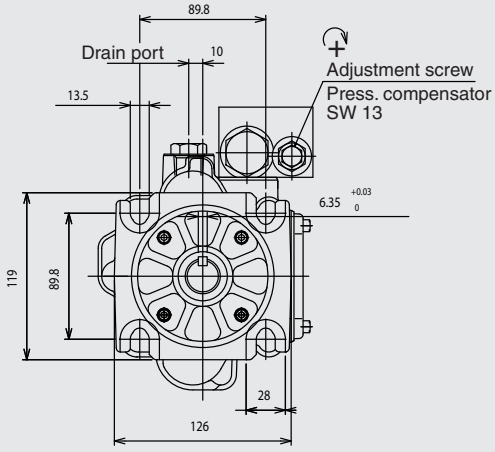

* Install the pump so that the filling port is at the top.

Model numbers	Thread size			Dimensions in mm						
	C	D	E	F	H	J	K	L	N	P
PPV100-16 ... 1080 European Standard	1/2 BSP.F	1/4 BSP.F	M10	19	–	49.5	37	28	25.01 24.85	22.23 22.20
PPV100-16 ... 10950 North American Standard	7/8-14 UNF	7/16-20 UNF	3/8-16 UNC	19	–	49.5	37	28	25.01 24.85	22.23 22.20

PPV100-16 with load sensing control 14

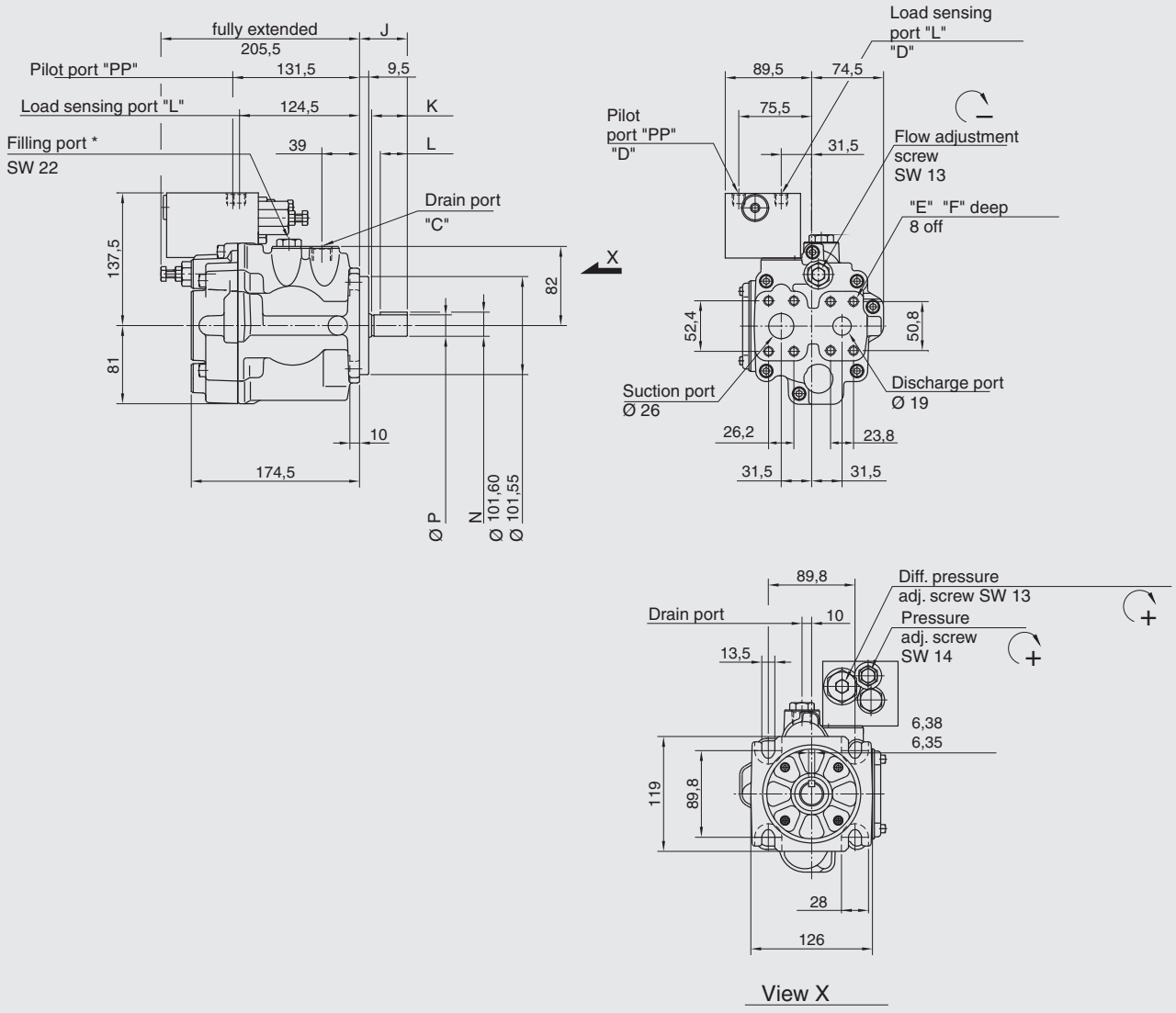

* Install the pump so that the filling port is at the top.

Model numbers	Thread size			Dimensions in mm						
	C	D	E	F	H	J	K	L	N	P
PPV100-16 ... 1080 European Standard	1/2 BSP.F	1/4 BSP.F	M10	19	–	49.5	37	28	25.01 24.85	22.23 22.20
PPV100-16 ... 10950 North American Standard	7/8-14 UNF	7/16-20 UNF	3/8-16 UNC	19	–	49.5	37	28	25.01 24.85	22.23 22.20

PPV100-37 with pressure control 01

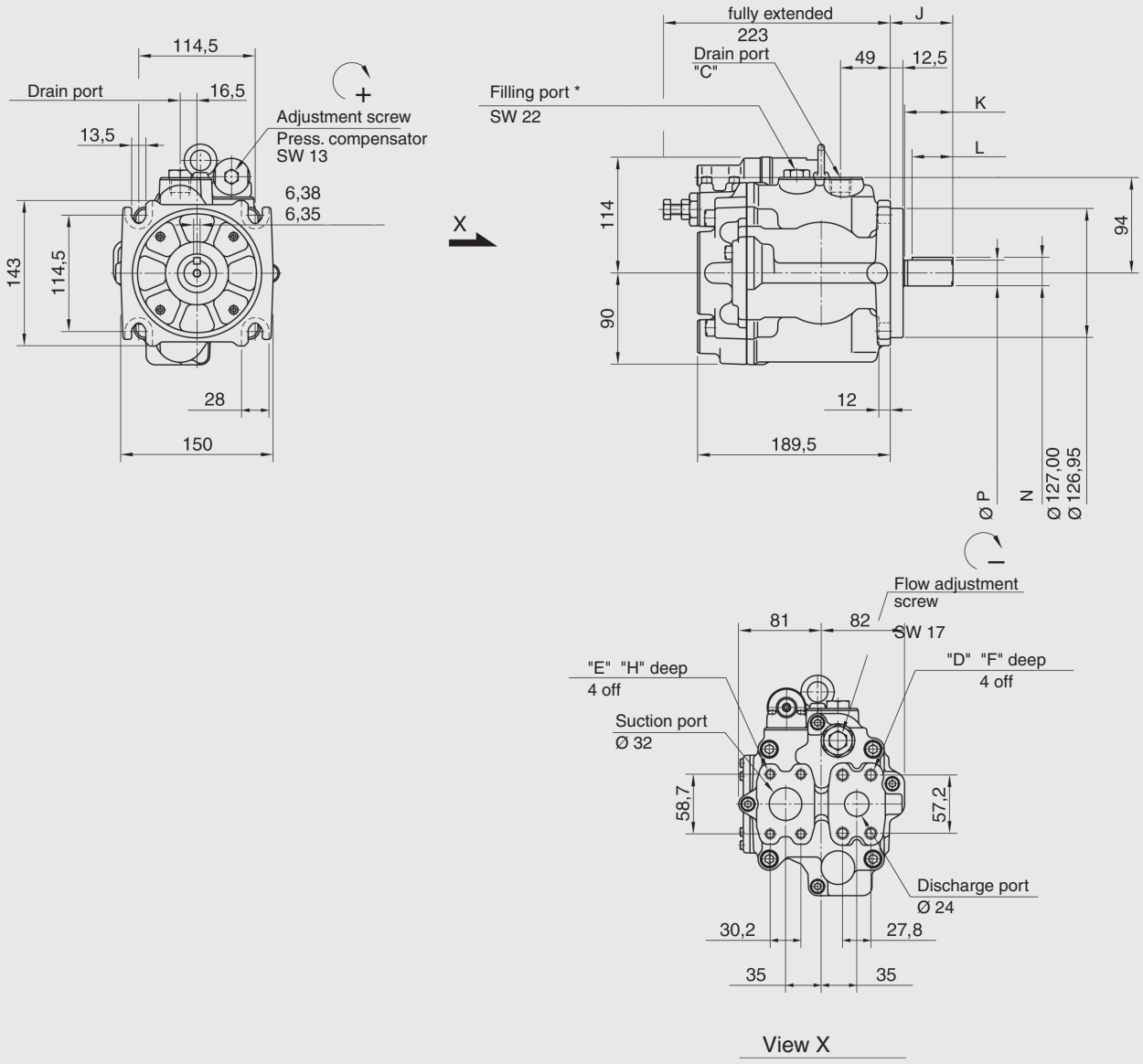

* Install the pump so that the filling port is at the top.

Model numbers	Thread size			Dimensions in mm						
	C	D	E	F	H	J	K	L	N	P
PPV100-37 ... 1080 European Standard	1/2 BSP.F	M12	M10	22	18	61.5	47.5	40	28.18 28.00	25.40 25.37
PPV100-37 ... 10950 North American Standard	7/8-14 UNF	1/2-13 UNC	7/16-14 UNC	21	20	61.5	47.5	40	28.18 28.00	25.40 25.37

PPV100-37 with remote pressure control 07

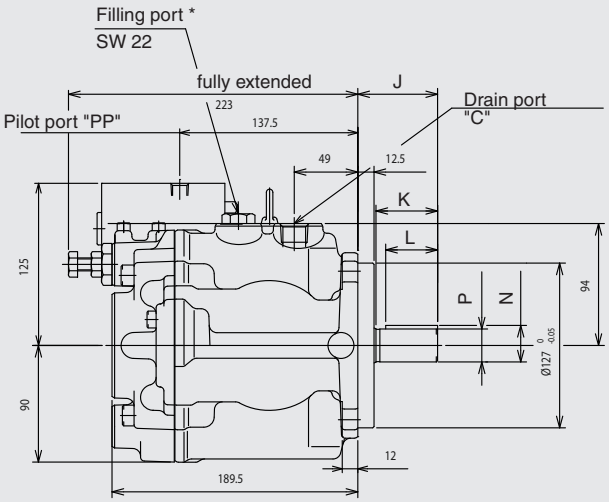

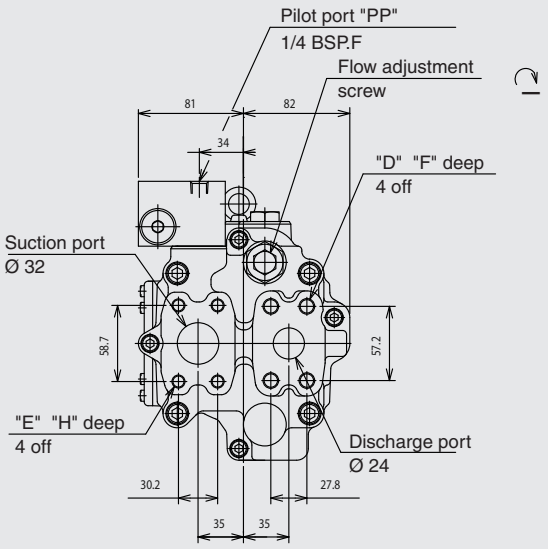

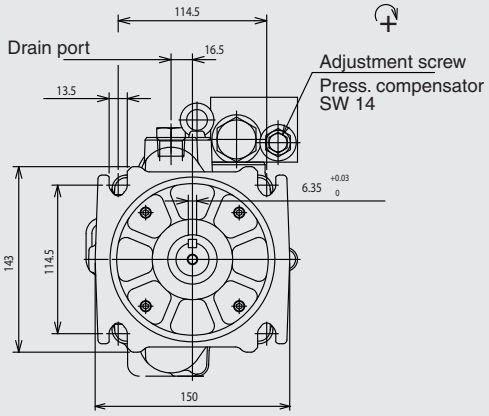

* Install the pump so that the filling port is at the top.

Model numbers	Thread size			Dimensions in mm						
	C	D	E	F	H	J	K	L	N	P
PPV100-37 ... 1080 European Standard	1/2 BSP.F	M12	M10	22	18	61.5	47.5	40	28.18 28.00	25.40 25.37
PPV100-37 ... 10950 North American Standard	7/8-14 UNF	1/2-13 UNC	7/16-14 UNC	21	20	61.5	47.5	40	28.18 28.00	25.40 25.37

PPV100-37 with power (torque) control 09

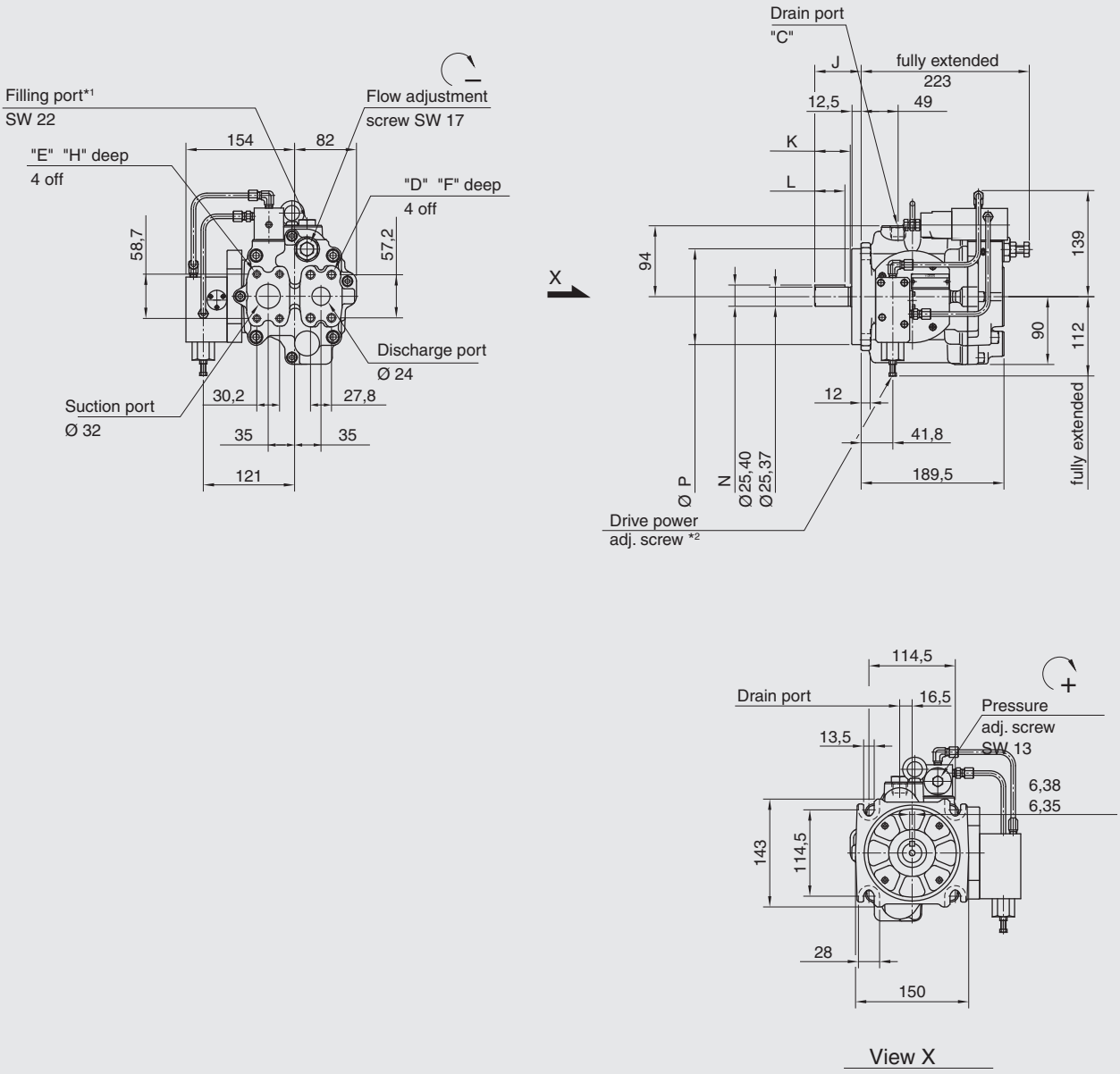

*1 Install the pump so that the filling port is at the top.

*2 Adjustment screw is factory-set

Model numbers	Thread size			Dimensions in mm						
	C	D	E	F	H	J	K	L	N	P
PPV100-37 ... 1080 European Standard	1/2 BSP.F	M12	M10	22	18	61.5	47.5	40	28.18 28.00	25.40 25.37
PPV100-37 ... 10950 North American Standard	7/8-14 UNF	1/2-13 UNC	7/16-14 UNC	21	20	61.5	47.5	40	28.18 28.00	25.40 25.37

PPV100-37 with load sensing control 14

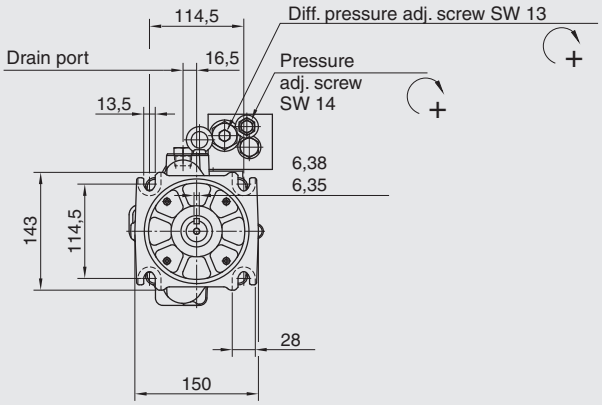

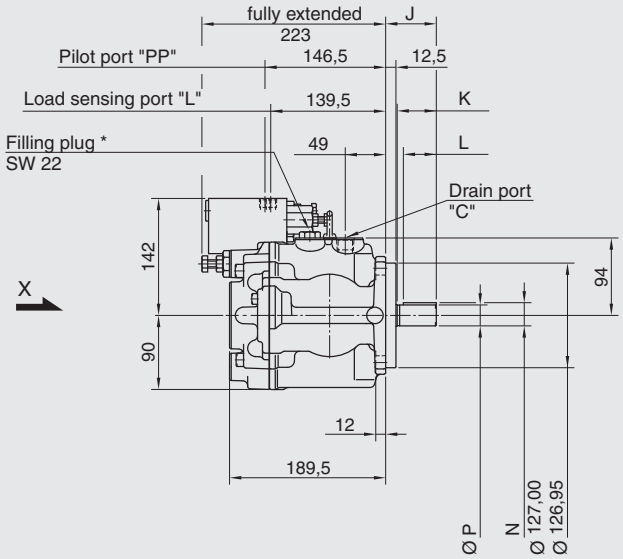

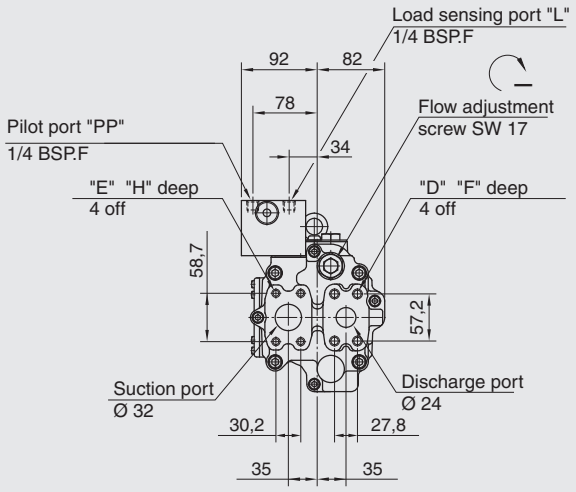

View X

* Install the pump so that the filling port is at the top.

Model numbers	Thread size			Dimensions in mm						
	C	D	E	F	H	J	K	L	N	P
PPV100-37 ... 1080 European Standard	1/2 BSP.F	M12	M10	22	18	61.5	47.5	40	28.18 28.00	25.40 25.37
PPV100-37 ... 10950 North American Standard	7/8-14 UNF	1/2-13 UNC	7/16-20 UNF	21	20	61.5	47.5	40	28.18 28.00	25.40 25.37

2.2.25 PPV100-56

PPV100-56 with pressure control 01

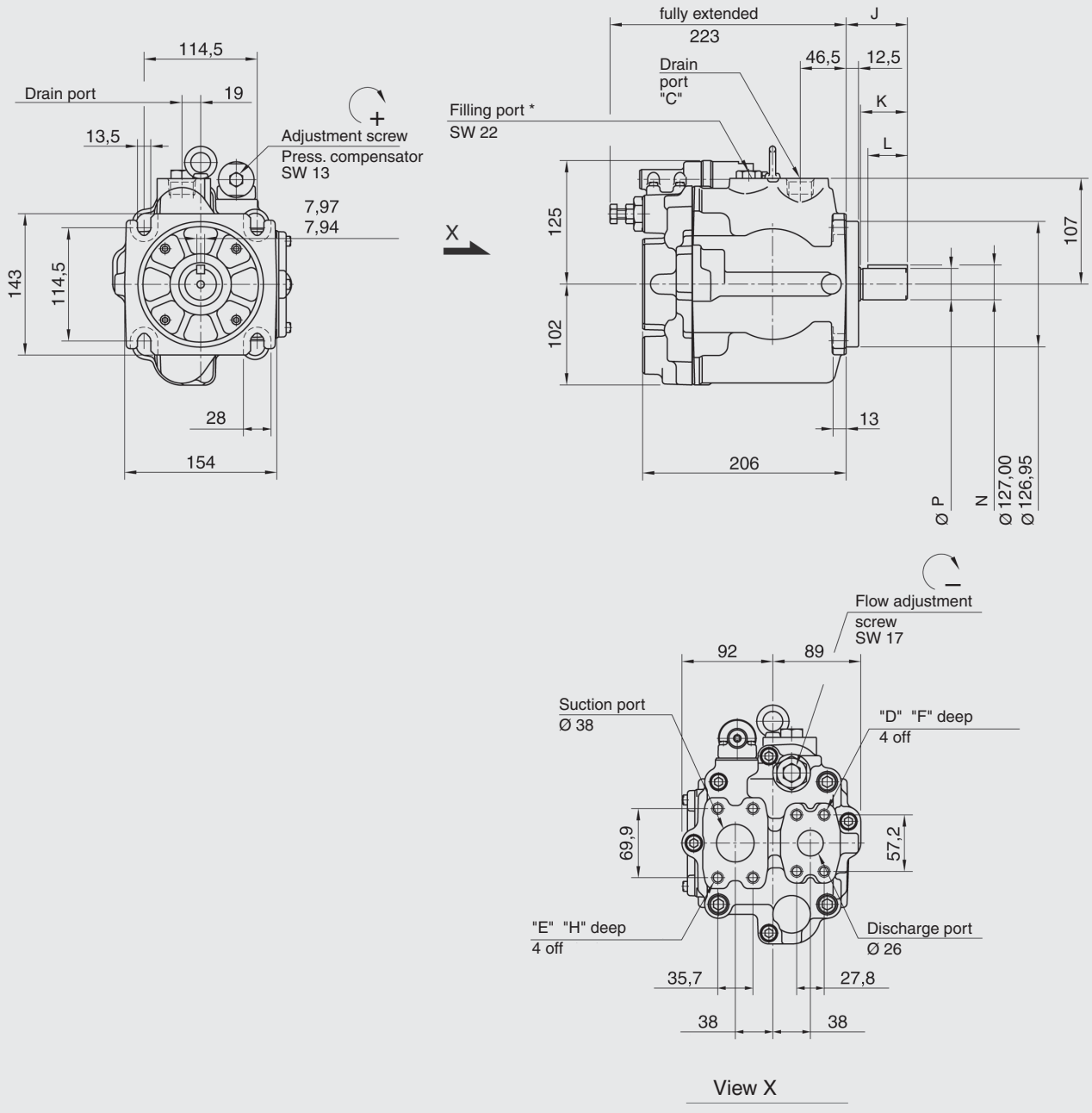

* Install the pump so that the filling port is at the top.

Model numbers	Thread size			Dimensions in mm						
	C	D	E	F	H	J	K	L	N	P
PPV100-56 ... 1080 European Standard	3/4 BSP.F	M12	M12	22	22	62	47.5	40	35.32 35.14	31.75 31.70
PPV100-56 ... 10950 North American Standard	1 1/16-12 UN	7/16-14 UNC	1/2-13 UNC	21	20	61.5	47.5	40	35.32 35.14	31.75 31.70

PPV100-56 with remote pressure control 07

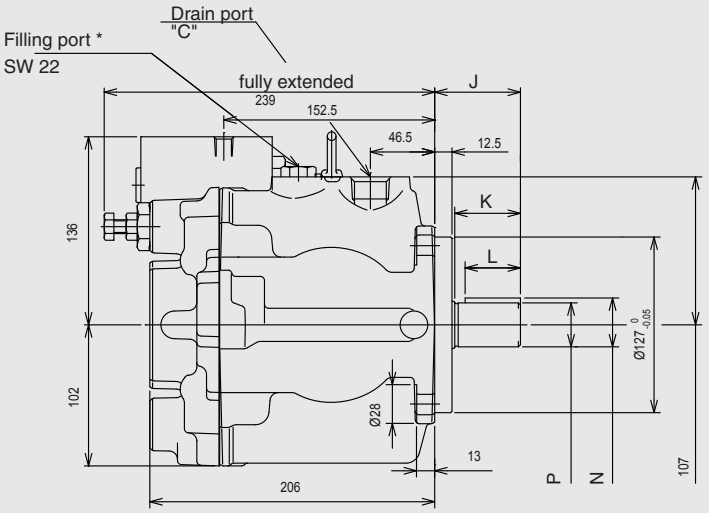

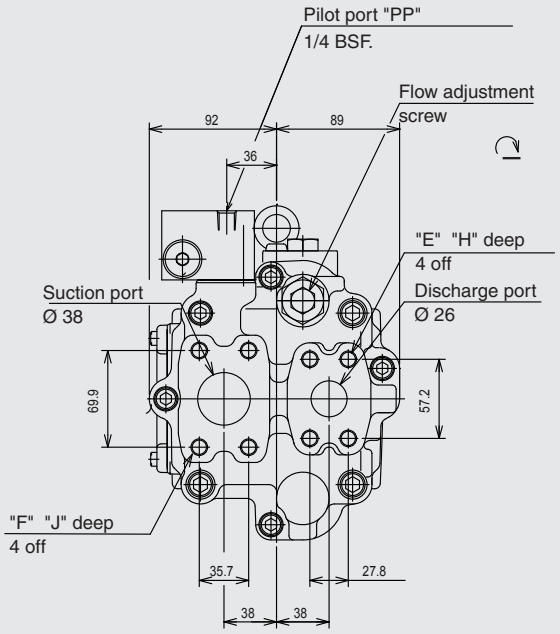

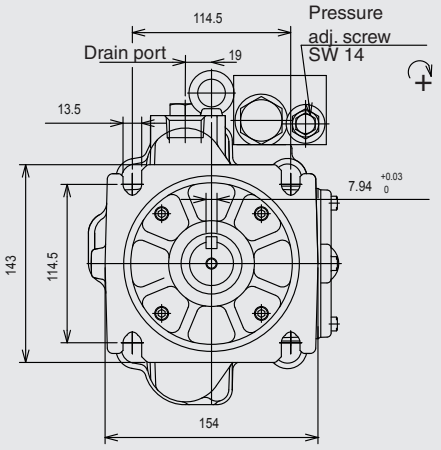

*1 Install the pump with the filling port at the top.
*2 Adjustment screw is pre-set at the factory

Model numbers	Thread size			Dimensions in mm						
	C	D	E	F	H	J	K	L	N	P
PPV100-56 ... 1080 European Standard	3/4 BSP.F	M12	M12	22	22	62	47.5	40	35.32 35.14	31.75 31.70
PPV100-56 ... 10950 North American Standard	1 1/16-12 UN	7/16-16 UNC	1/2-13 UNC	20	21	62	47.5	40	35.32 35.14	31.75 31.70

PPV100-56 with power (torque) control 09

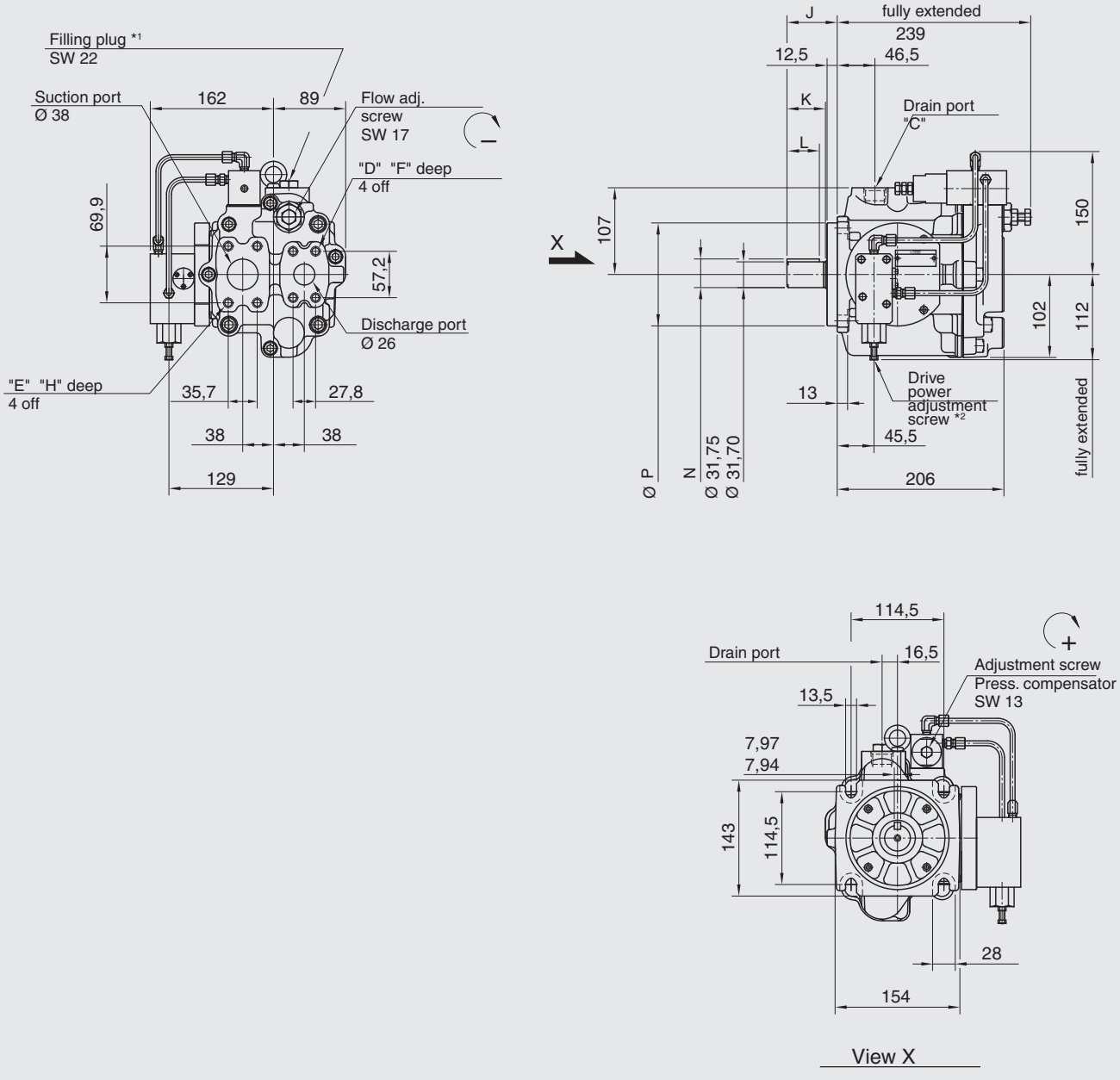

*1 Install the pump with the filling port at the top.
*2 Adjustment screw is pre-set at the factory

Model numbers	Thread size			Dimensions in mm						
	C	D	E	F	H	J	K	L	N	P
PPV100-56 ... 1080 European Standard	3/4 BSP.F	M12	M12	22	22	62	47.5	40	35.32 35.14	31.75 31.70
PPV100-56 ... 10950 North American Standard	1 1/16-12 UN	7/16-14 UNC	1/2-13 UNC	20	21	62	47.5	40	35.32 35.14	31.75 31.70

PPV100-56 with load sensing control 14

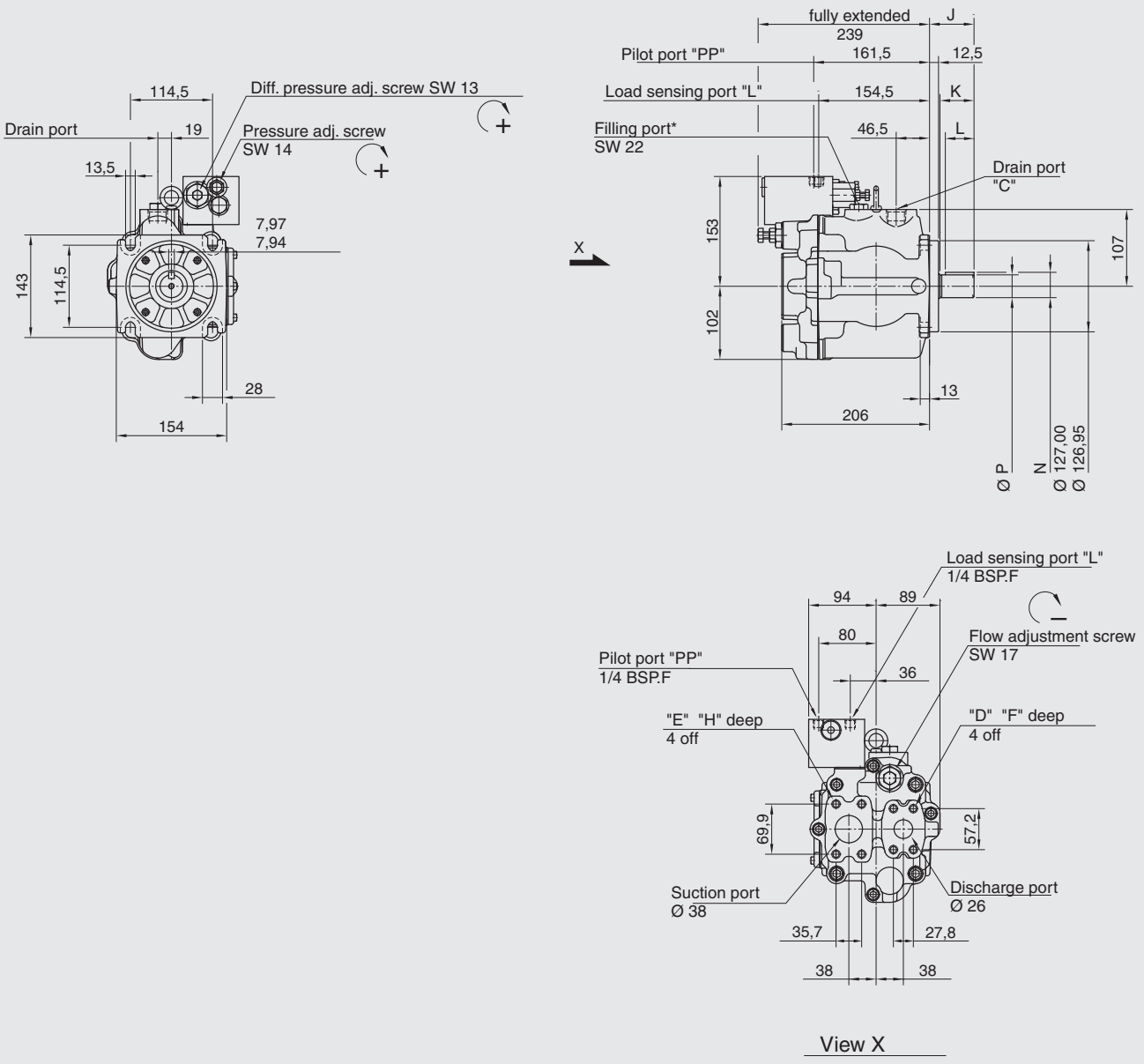

* Install the pump so that the filling port is at the top.

Model numbers	Thread size			Dimensions in mm						
	C	D	E	F	H	J	K	L	N	P
PPV100-56 ... 1080 European Standard	3/4 BSP.F	M12	M12	22	22	62	47.5	40	35.32 35.17	31.75 31.70
PPV100-56 ... 10950 North American Standard	1 1/16-12 UN	7/16-14 UNC	1/2-13 UNC	20	21	62	47.5	40	35.32 35.17	31.75 31.70

PPV100-71 with pressure control 01

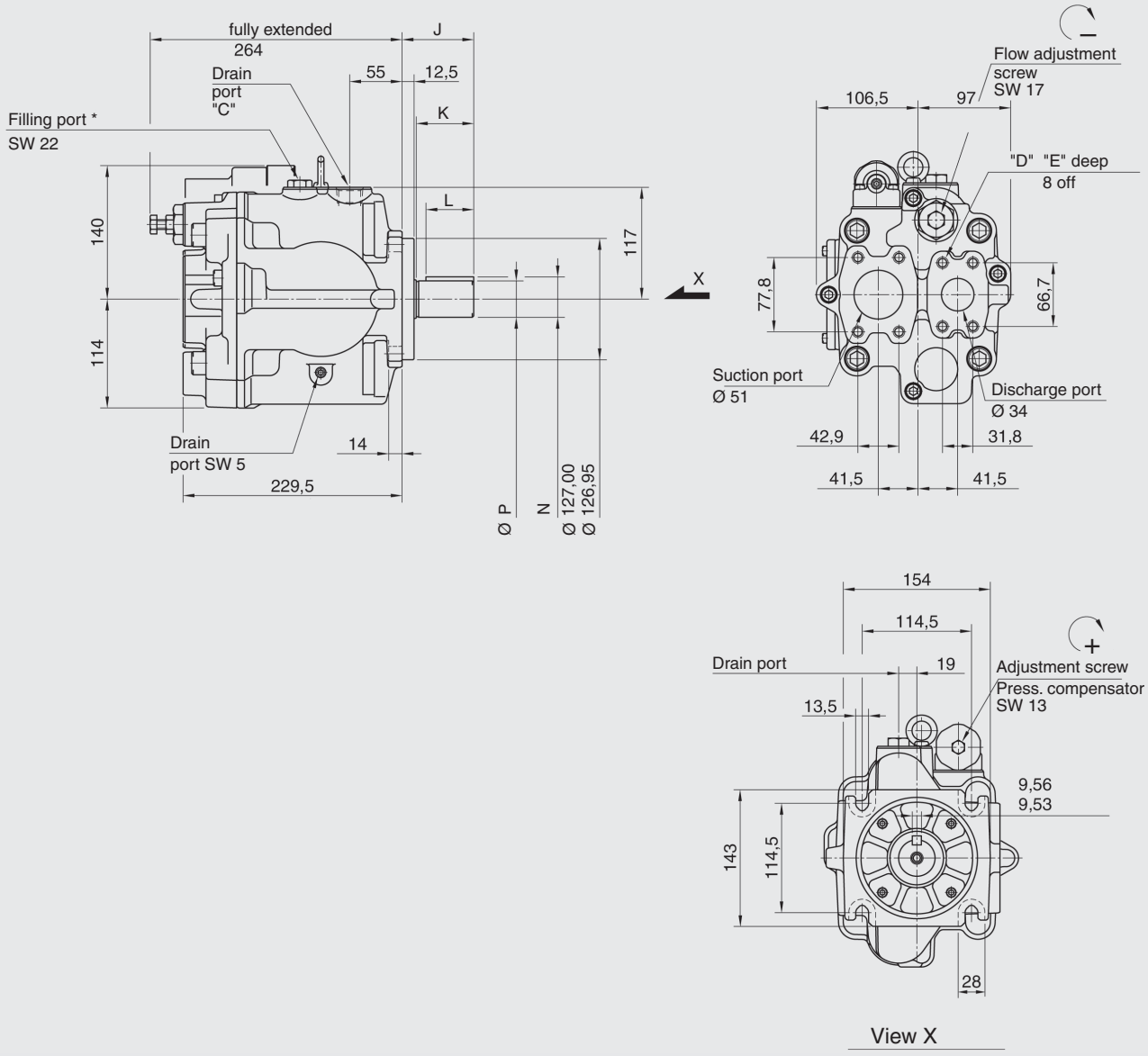

* Install the pump so that the filling port is at the top.

Model numbers	Thread size			Dimensions in mm						
	C	D	E	F	H	J	K	L	N	P
PPV100-71 ... 1080 European Standard	3/4 BSP.F	M12	–	19	–	75	60.5	50	42.36 42.18	38.10 38.05
PPV100-71 ... 10950 North American Standard	1 1/16-12 UN	1/2-13 UNC	–	21	–	75	60.5	50	42.36 42.18	38.10 38.05

PPV100-71 with power (torque) control 09

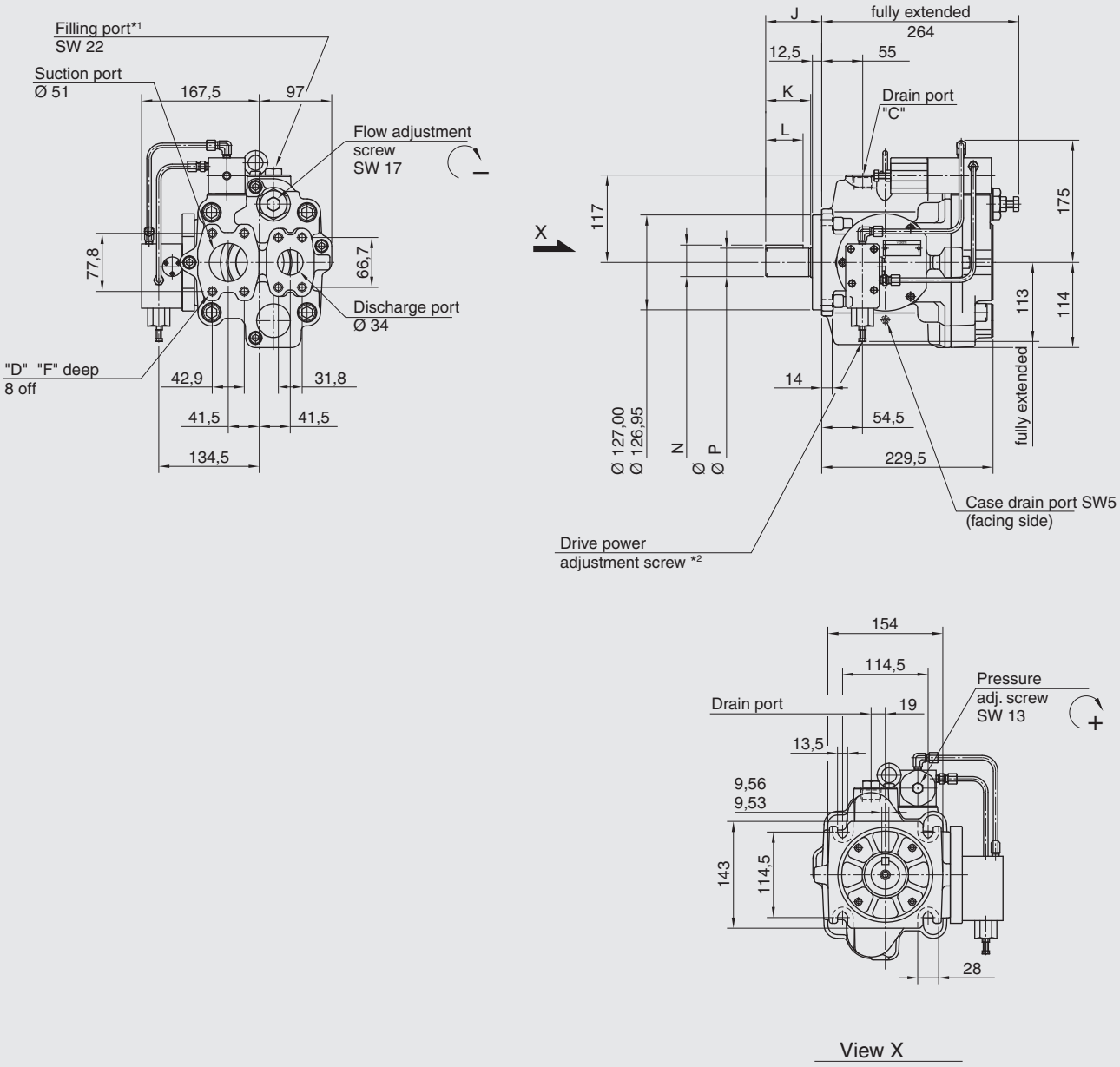

*1 Install the pump with the filling port at the top.

*2 Adjustment screw is factory-set

Model numbers	Thread size			Dimensions in mm						
	C	D	E	F	H	J	K	L	N	P
PPV100-71 ... 1080 European Standard	3/4 BSP.F	M12	–	19	–	75	60.5	50	42.36 42.18	38.10 38.05
PPV100-71 ... 10950 North American Standard	1 1/16-12 UN	1/2-13 UNC	–	21	–	75	60.5	50	42.36 42.18	38.10 38.05

PPV100-71 with load sensing control 14

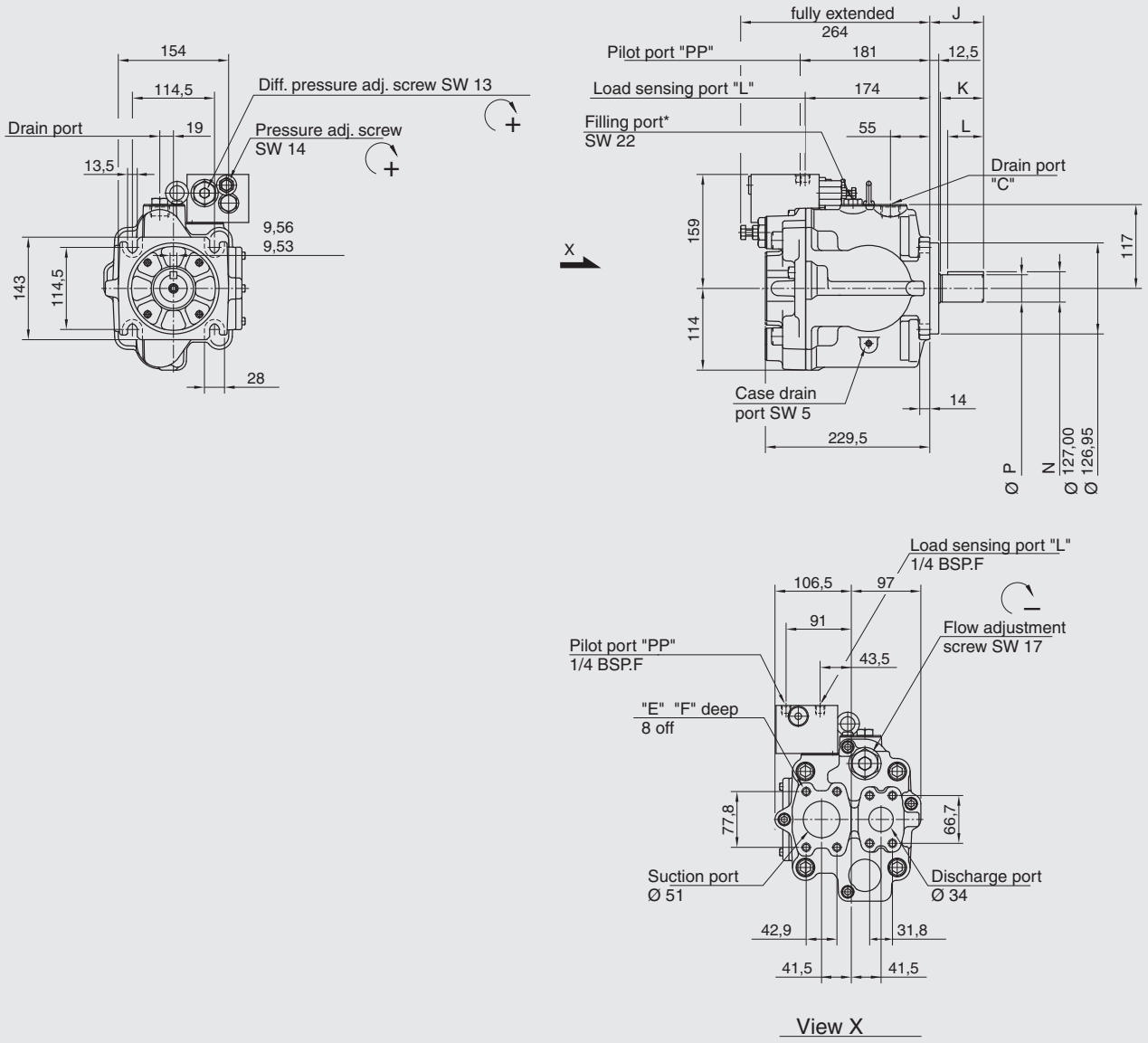

* Install the pump so that the filling port is at the top.

Model numbers	Thread size			Dimensions in mm						
	C	D	E	F	H	J	K	L	N	P
PPV100-71 ... 1080 European Standard	3/4 BSP.F	M12	–	19	–	75	60.5	50	42.36 42.18	38.10 38.05
PPV100-71 ... 10950 North American Standard	1 1/16-12 UN	1/2-13 UNC	–	21	–	75	60.5	50	42.36 42.18	38.10 38.05

PPV100-100 with pressure control 01

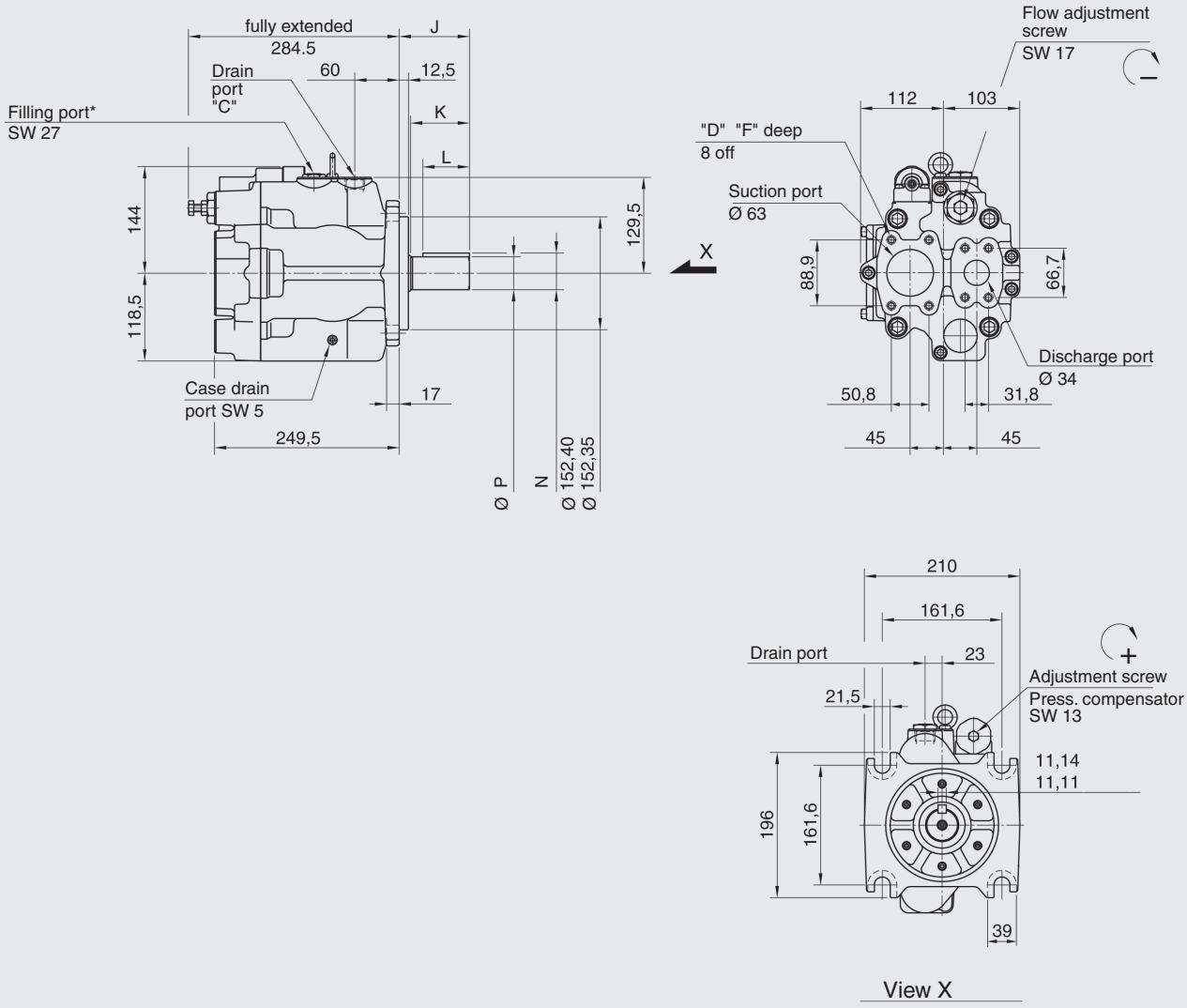

* Install the pump so that the filling port is at the top.

Model numbers	Thread size			Dimensions in mm						
	C	D	E	F	H	J	K	L	N	P
PPV100-100 ... 1080 European Standard	3/4 BSP.F	M12	–	22	–	95	81	63	49.39 49.21	44.45 44.40
PPV100-100 ... 10954 North American Standard	1 1/16-12 UN	1/2-13 UNC	–	21	–	74.6	60.6	50	49.39 49.21	44.45 44.40

PPV100-100 with power (torque) control 09

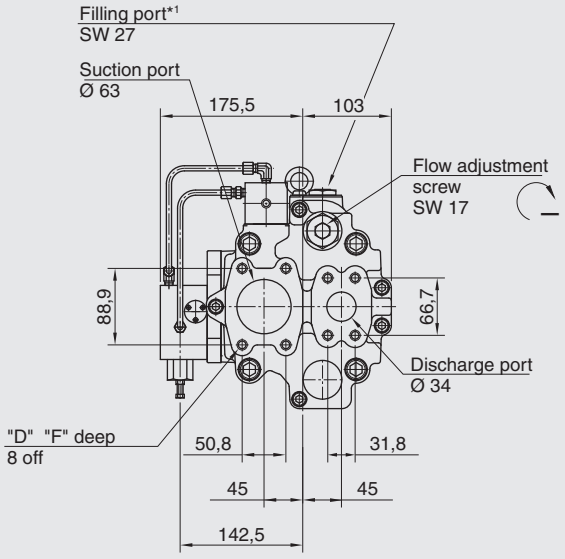

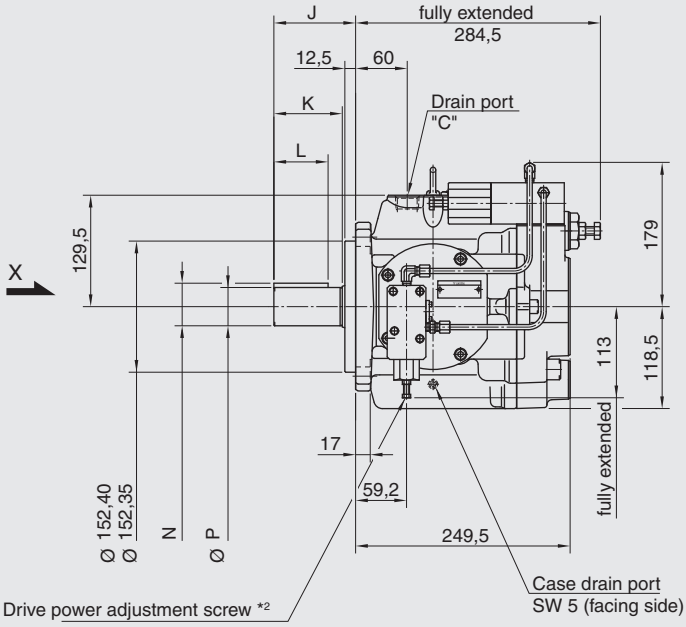

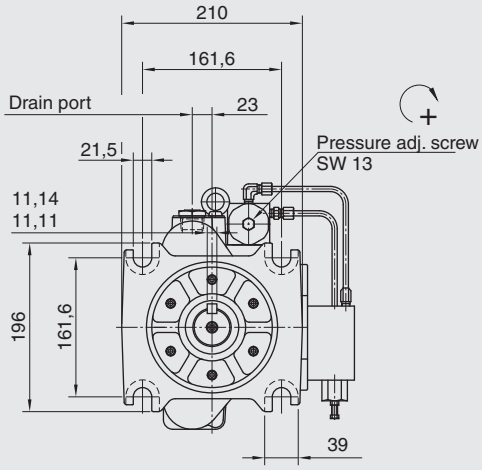

View X

*1 Install the pump with the filling port at the top.
*2 Adjustment screw is pre-set at the factory

Model numbers	Thread size			Dimensions in mm						
	C	D	E	F	H	J	K	L	N	P
PPV100-100 ... 1080 European Standard	3/4 BSP.F	M12	–	55	–	95	81	63	49.39 49.21	44.45 44.40
PPV100-100 ... 10954 North American Standard	1 1/16-12 UN	1/2-13 UNC	–	21	–	74.6	60.6	50	49.39 49.21	44.45 44.40

PPV100-100 with load sensing control 14

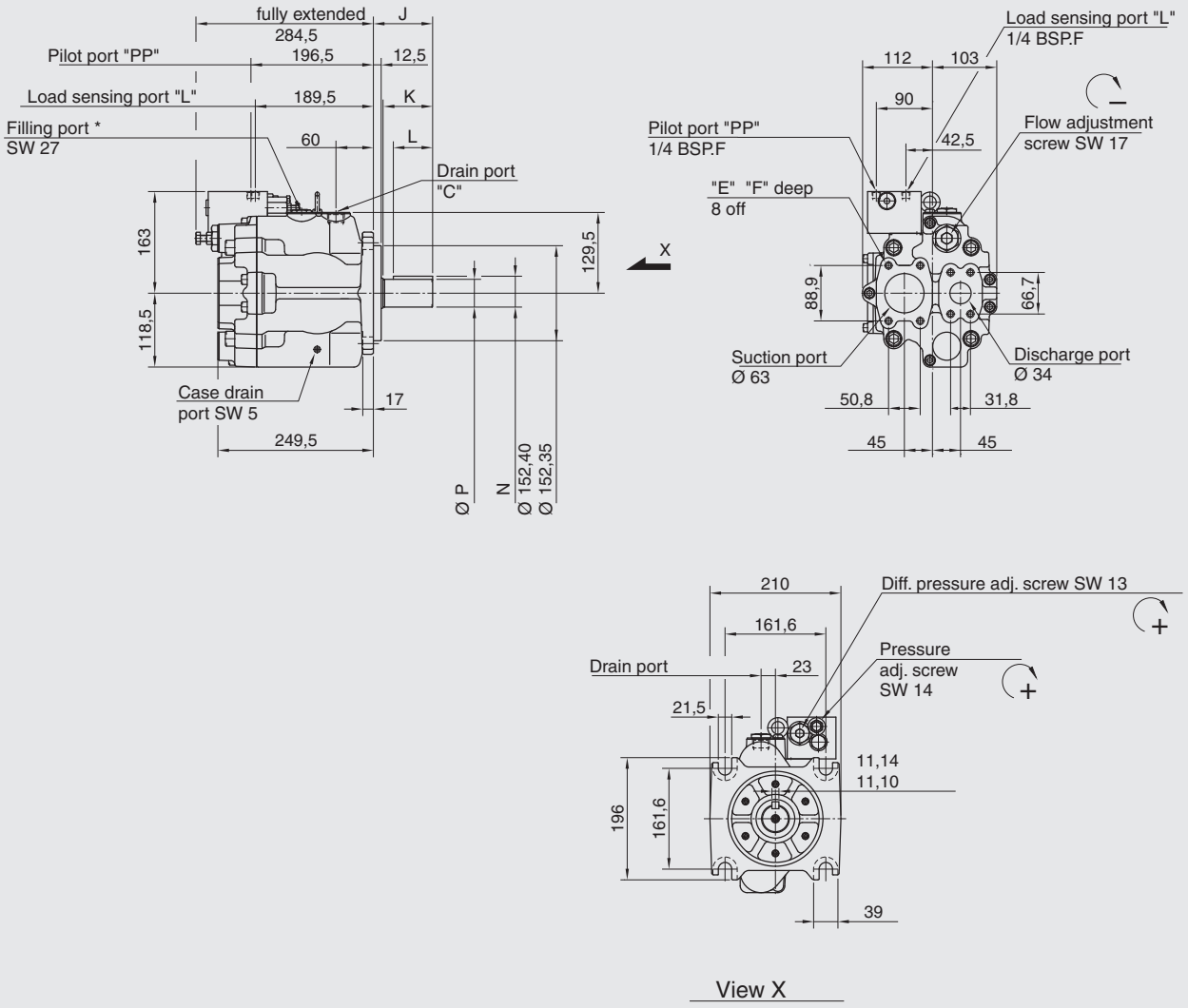

* Install the pump so that the filling port is at the top.

Model numbers	Thread size			Dimensions in mm						
	C	D	E	F	H	J	K	L	N	P
PPV100-100 ... 1080 European Standard	3/4 BSP.F	M12	–	22	–	95	81	63	49.39 49.21	44.45 44.40
PPV100-100 ... 10954 North American Standard	1 1/16-12 UN	1/2-13 UNC	–	21	–	74.6	60.6	50	49.39 49.21	44.45 44.40

PPV100-145 with pressure control 01

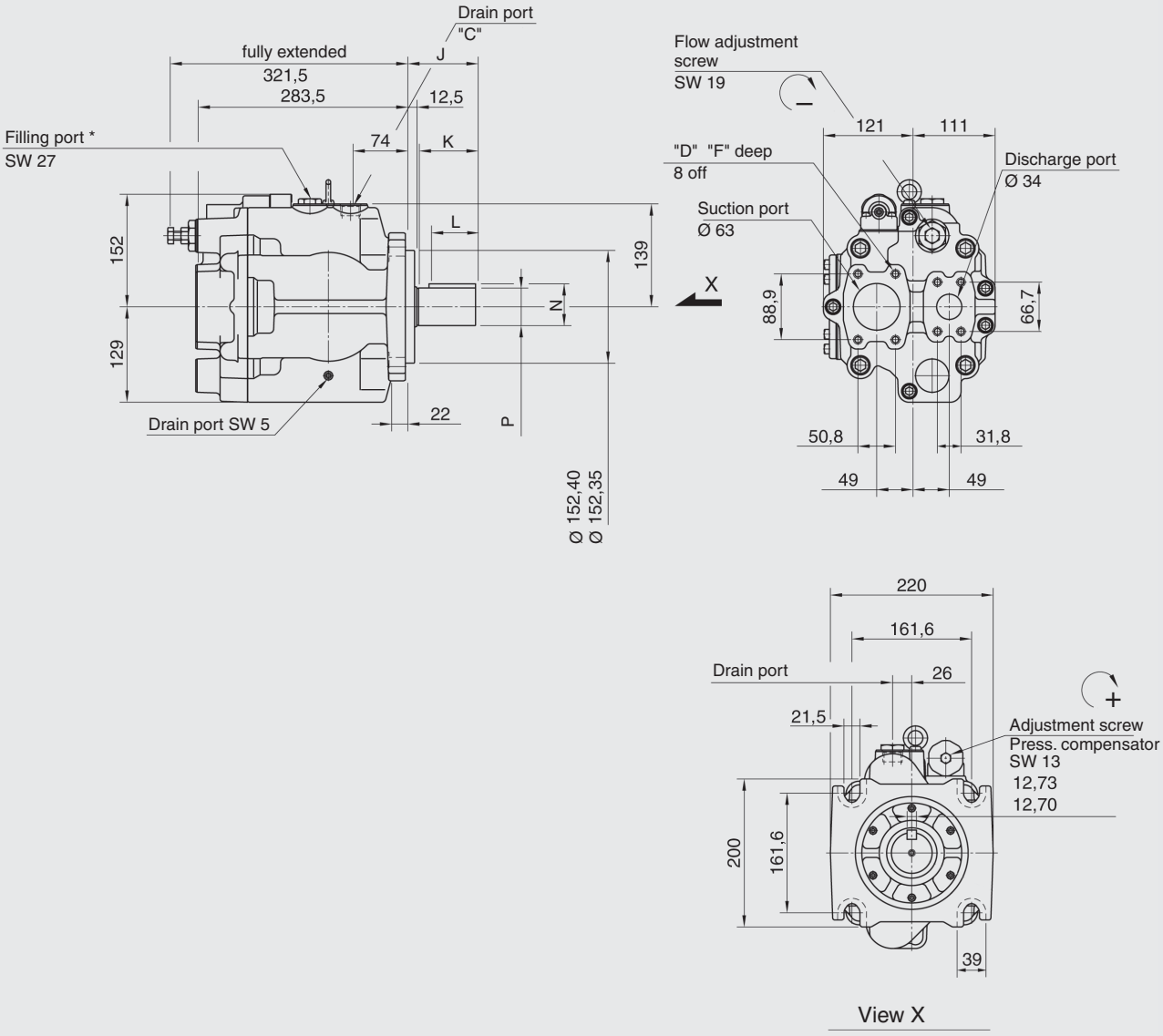

* Install the pump so that the filling port is at the top.

Model numbers	Thread size			Dimensions in mm						
	C	D	E	F	H	J	K	L	N	P
PPV100-145 ... 1080 European Standard	3/4 BSP.F	M12	–	22	–	95	81	63	56.43 56.25	50.80 50.75
PPV100-145 ... 10954 North American Standard	1 1/16-12 UN	1/2-13 UNC	–	21	–	74.6	60.6	50	56.43 56.25	50.80 50.75

PPV100-145 with power (torque) control 09

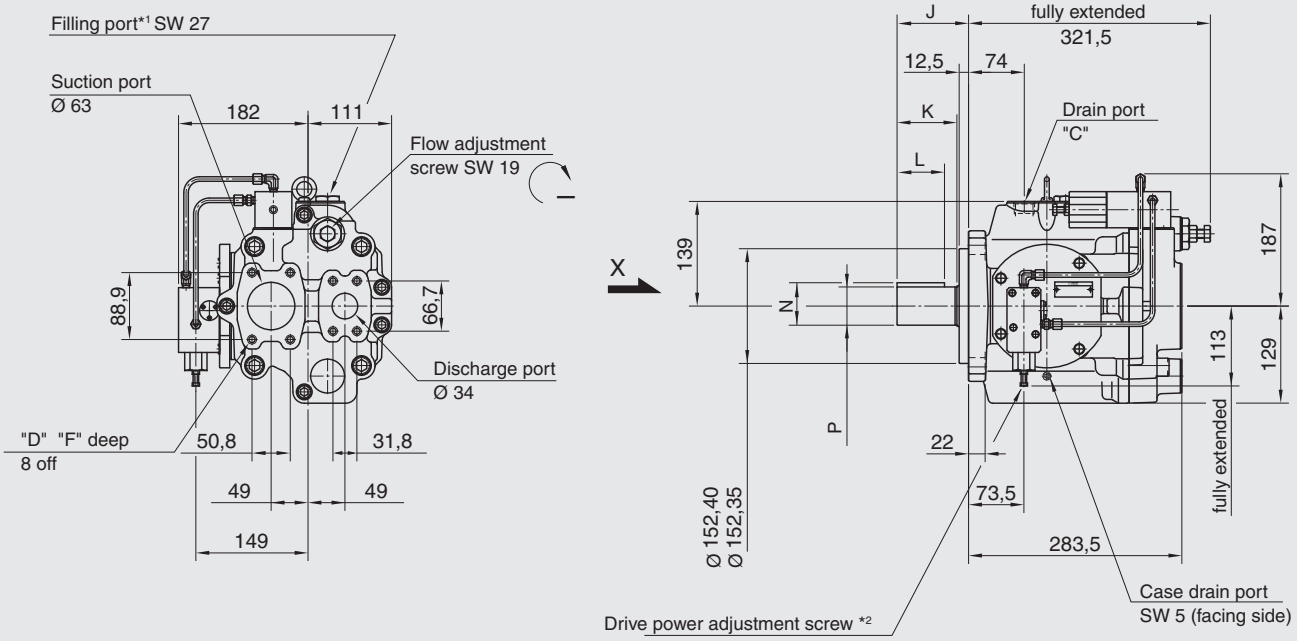

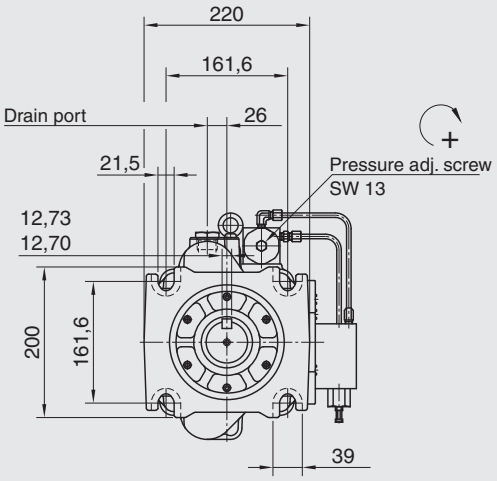

View X

*1 Install the pump so that the filling port is at the top.

*2 Adjustment screw is factory-set

Model numbers	Thread size			Dimensions in mm						
	C	D	E	F	H	J	K	L	N	P
PPV100-145 ... 1080 European Standard	3/4 BSP.F	M12	–	22	–	95	81	63	56.43 56.25	50.80 50.75
PPV100-145 ... 10954 North American Standard	1 1/16-12 UN	1/2-13 UNC	–	21	–	74.6	60.6	50	56.43 56.25	50.80 50.75

PPV100-145 with load sensing control 14

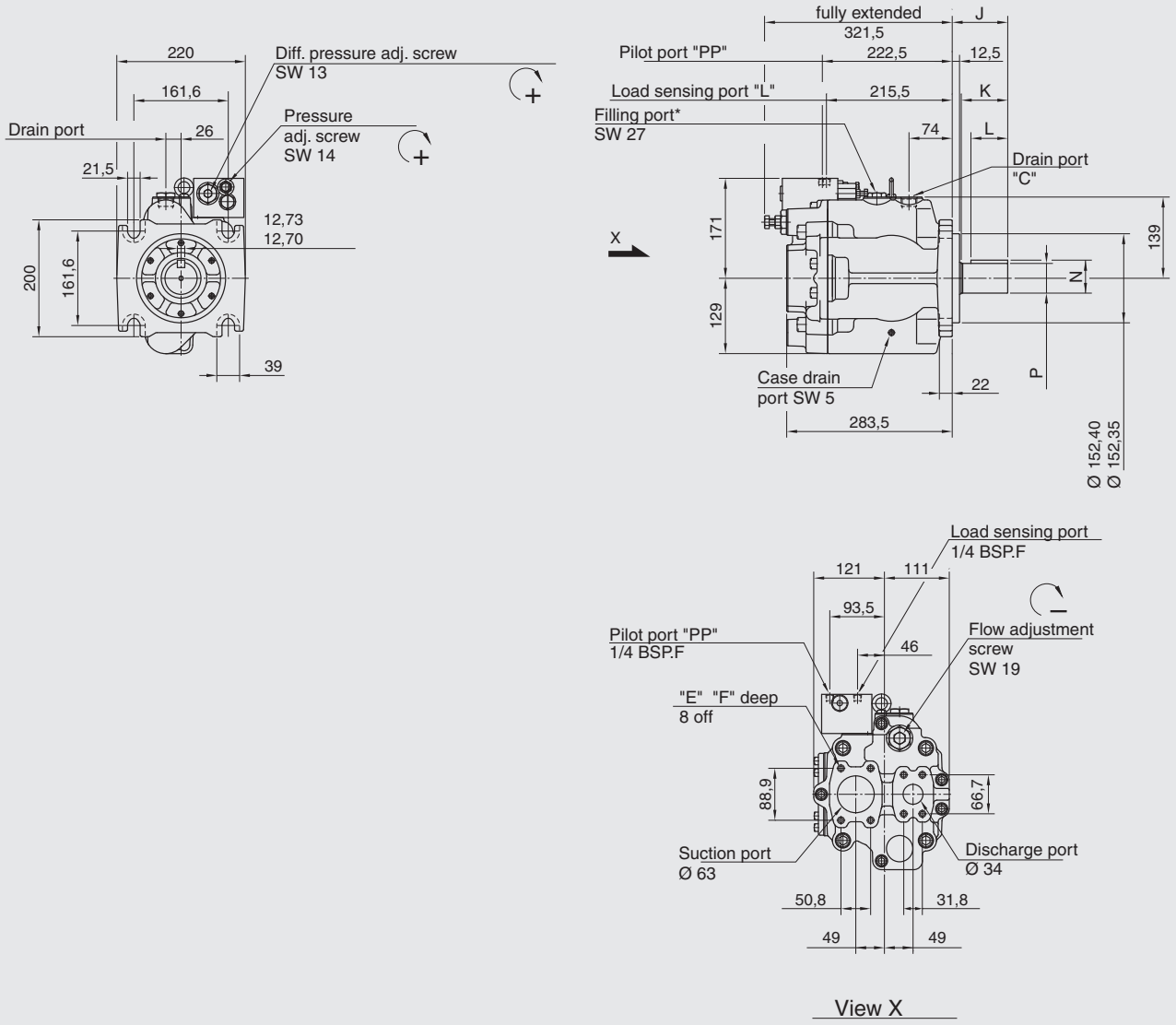

* Install the pump so that the filling port is at the top.

Model numbers	Thread size			Dimensions in mm						
	C	D	E	F	H	J	K	L	N	P
PPV100-145 ... 1080 European Standard	3/4 BSP.F	M12	–	22	–	95	81	63	56.43 56.25	50.80 50.75
PPV100-145 ... 10954 North American Standard	1 1/16-12 UN	1/2-13 UNC	–	21	–	74.6	60.6	50	56.43 56.25	50.80 50.75

PPV100-180 with pressure control 01

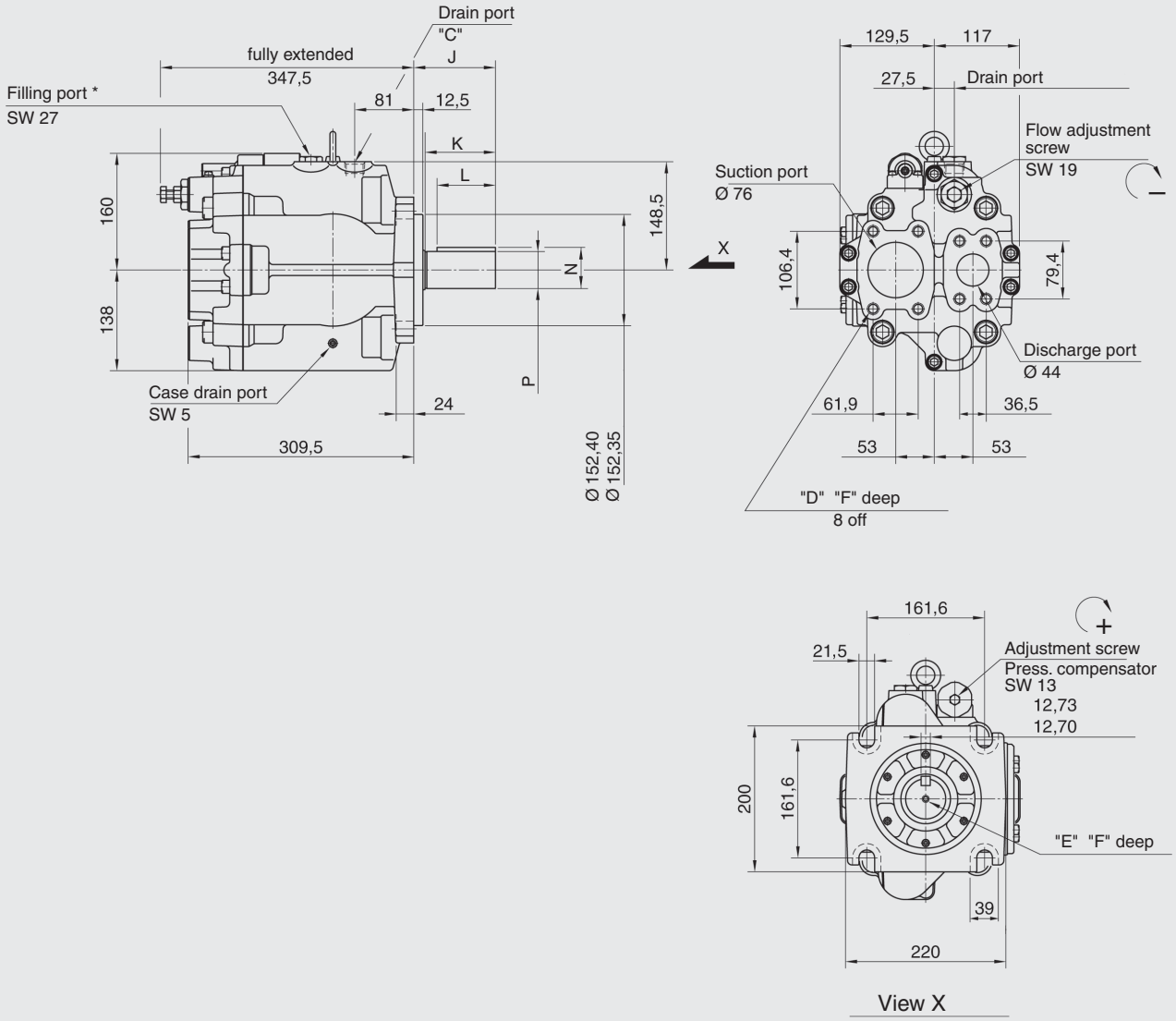

* Install the pump so that the filling port is at the top.

Model numbers	Thread size			Dimensions in mm						
	C	D	E	F	H	J	K	L	N	P
PPV100-180 ... 1080 European Standard	3/4 BSP.F	M16	–	29	–	112	97.5	80	56.43 56.25	50.80 50.75
PPV100-180 ... 10954 North American Standard	1 1/16-12 UN	5/8-11 UNC	–	36	–	99.8	85.3	70	56.43 56.25	50.80 50.75

PPV100-180 with power (torque) control 09

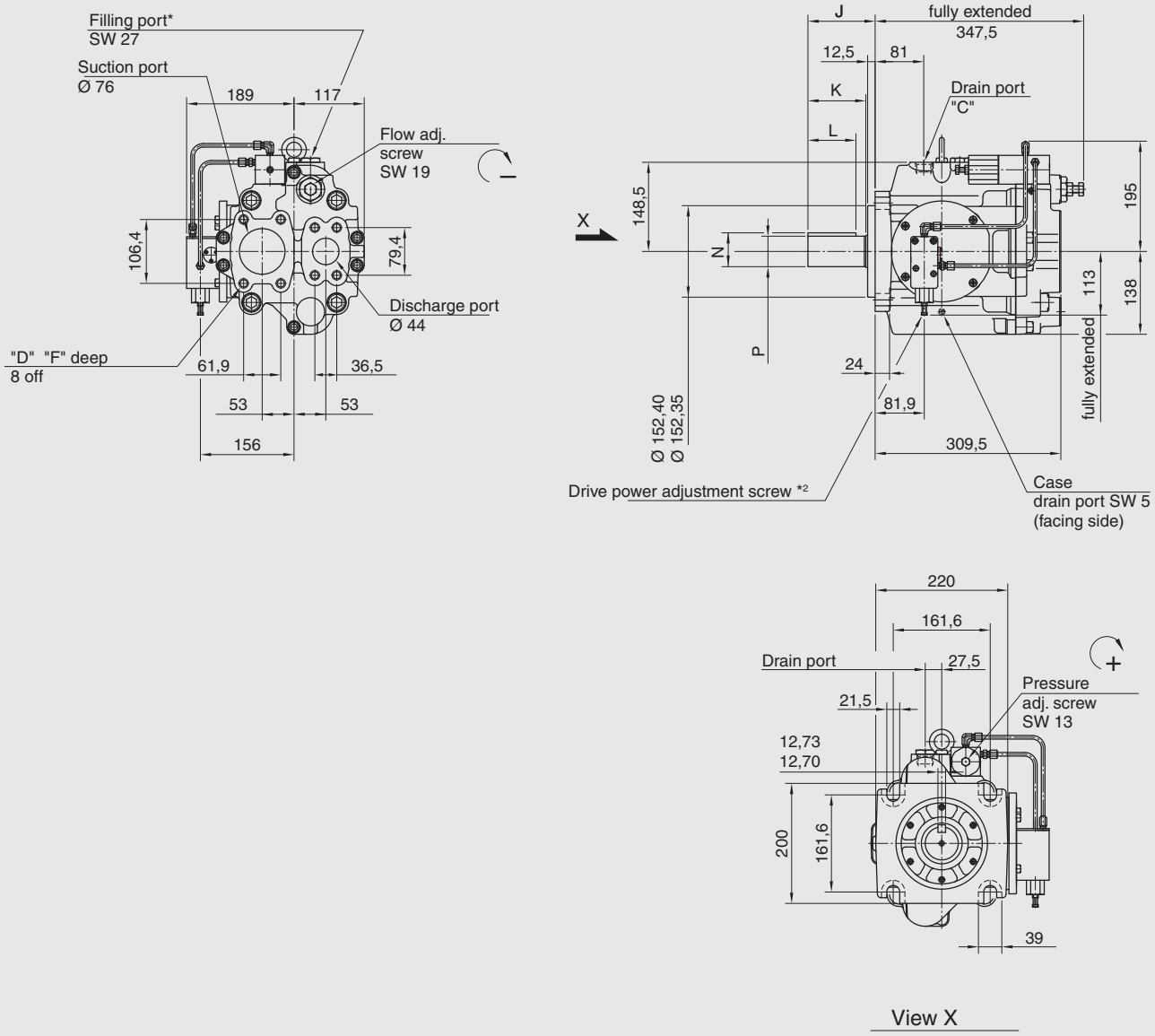

*1 Install the pump with the filling port at the top.
*2 Adjustment screw is pre-set at the factory

Model numbers	Thread size			Dimensions in mm						
	C	D	E	F	H	J	K	L	N	P
PPV100-180 ... 1080 European Standard	3/4 BSP.F	M16	–	29	–	112	97.5	80	56.43 56.25	50.80 50.75
PPV100-180 ... 10954 North American Standard	1 1/16-12 UN	5/8-11 UNC	–	36	–	99.8	85.3	70	56.43 56.25	50.80 50.75

PPV100-180 with load sensing control 14

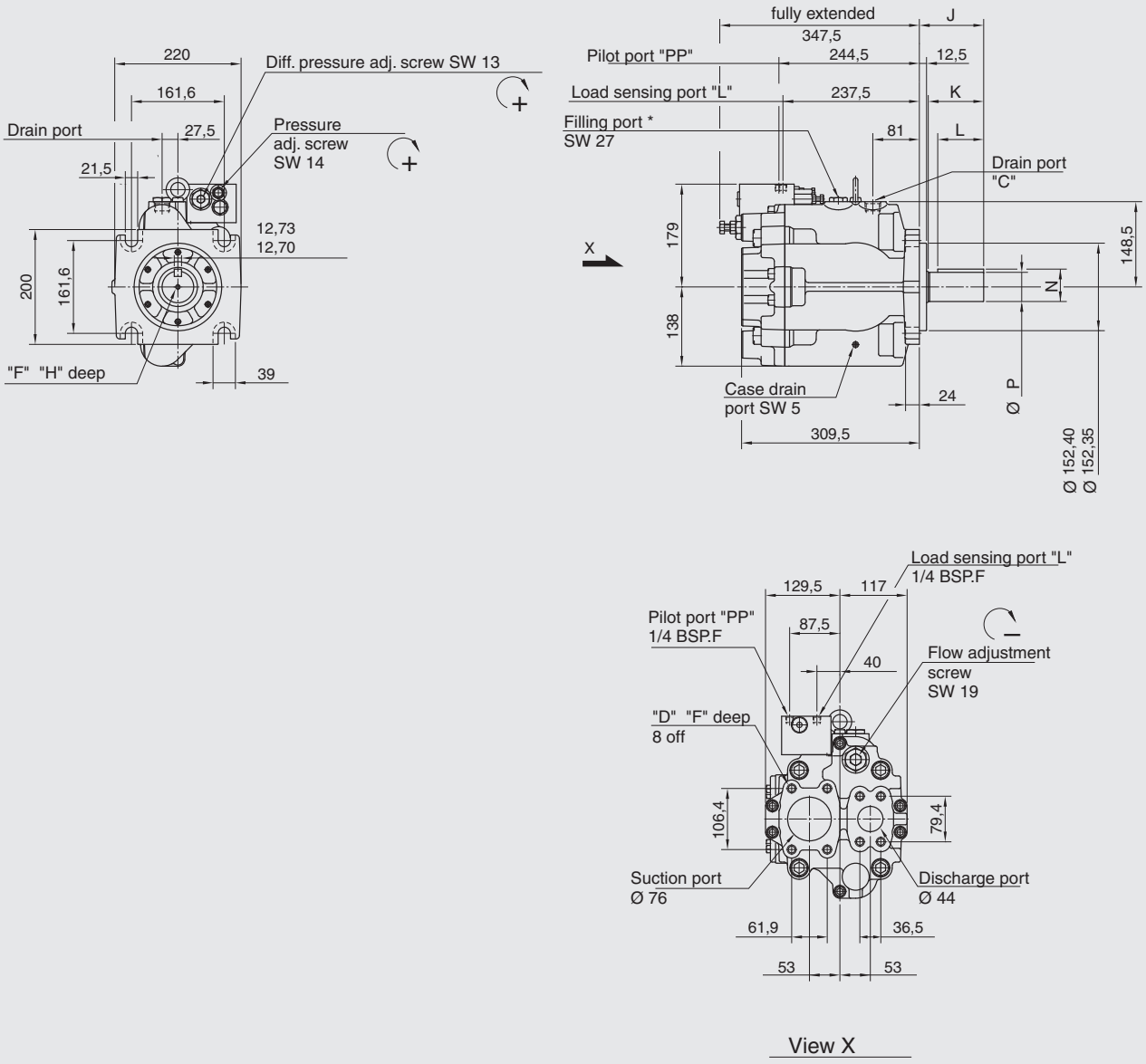

View X

* Install the pump so that the filling port is at the top.

Model numbers	Thread size			Dimensions in mm						
	C	D	E	F	H	J	K	L	N	P
PPV100-180 ... 1080 European Standard	3/4 BSP.F	M16	–	29	–	112	97.5	80	56.43 56.25	50.80 50.75
PPV100-180 ... 10954 North American Standard	1 1/16-12 UN	5/8-11 UNC	–	36	–	99.8	85.3	70	56.43 56.25	50.80 50.75